SPACER PAGE FOR FLIGHT CONTROLS STUDENT HANDOUT PART THREE

ENGINE ANTI-ICING START BLEED SYSTEM

04-94-78

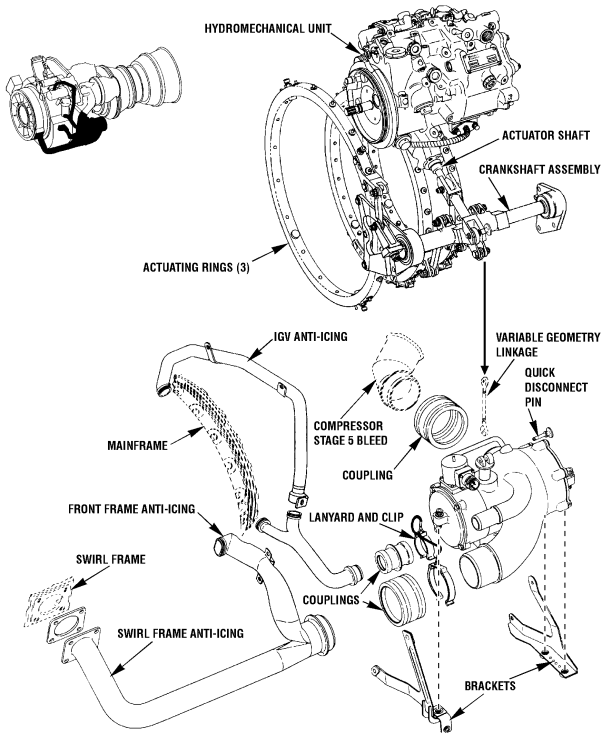

NOTES

A. Engine anti-icing/start bleed system

1. The anti-icing system prevents ice from forming in the flow path of the engine inlet.

2. The anti-icing system also bleeds air from the compressor during engine starting. This reduces back pressure on the axial compressor at lower speeds and prevents compressor stall.

3. Anti-icing takes place in two ways.

   a. Hot axial compressor bleed air flows through the swirl vanes and inlet guide vanes.

   b. Hot scavenge oil flows through the internal passages in the scroll vanes.

4. Components of the engine anti-icing/start bleed system include:

   a. Anti-ice/start bleed valve

   b. Air manifolds and associated hardware

   c. Variable geometry linkage system

B. Component descriptions

ENGINE ANTI-ICE AND START BLEED VALVE (EATON (CONSOLIDATED CONTROL))

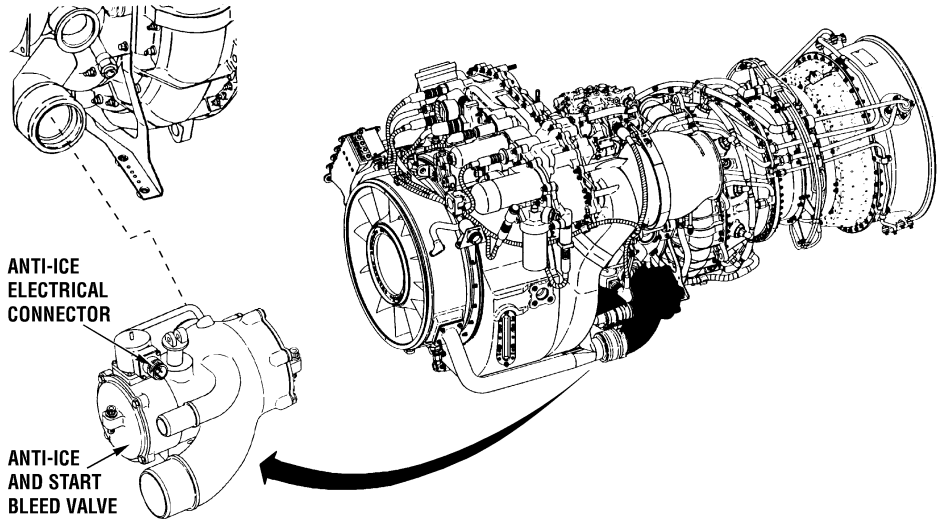

04-94-79

NOTES

1. Anti-ice/start bleed valve (Eaton (Consolidated Control))

   a. Controls anti-icing airflow to the engine and bleeds excessive compressor discharge pressure during engine start and low speed acceleration mode.

   b. Mounted on the mainframe at the 7:30 o'clock position.

   c. Mechanically controlled by the HMU during starts through the same linkage that positions the IGV and variable geometry stator vanes. Opens and closes at different N_G speeds dependent upon ambient air temperature.

   d. Electrically selected by the pilot's ENG INLET switch on the ANT-ICE panel.

   e. The anti-ice/start bleed valve is "fail safe" to the open position. This means that the valve is electrically closed and mechanically opened. Therefore, in the event of an airframe electrical system failure, the anti-ice/start bleed valve opens.

ANTI-ICE AND START BLEED VALVE OPERATION

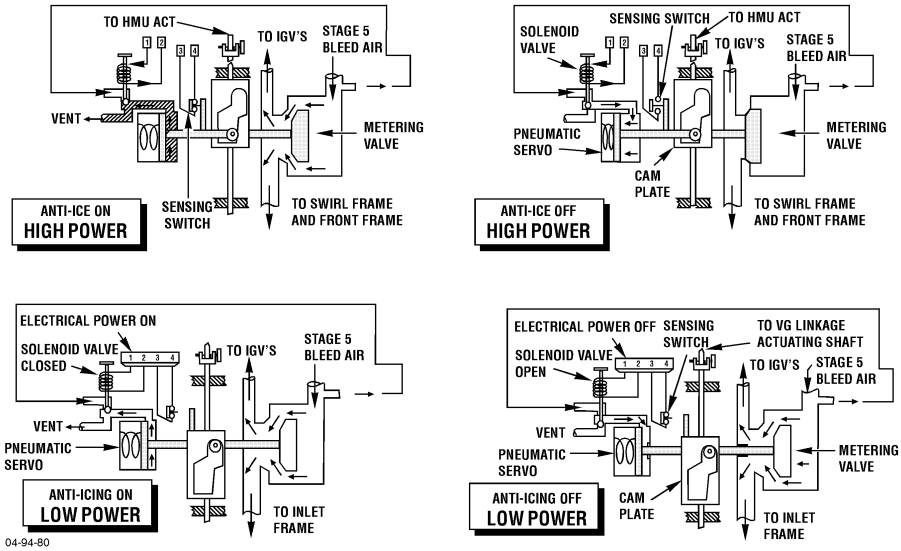

NOTES

2. Anti-ice/start bleed valve operation

a. High power

(1) During high power operations the HMU positions the cam plate in the up position allowing the metering valve to open or close as appropriate.

(2) During high power operations the anti-ice/start bleed valve is controlled only by ENG INLET anti-ice switch position.

(a) ENG INLET anti-ice switch OFF

1) Electrical power is applied to the solenoid valve which closes the vent.

2) 5th stage bleed air pressurizes the pneumatic servo and closes the metering valve, stopping anti-ice airflow.

3) The sensing switch contacts are opened causing the ENG 1/ENG 2 advisory lights on the ANTI-ICE panel to extinguish.

(b) ENG INLET anti-ice switch ON

1) Electrical power is removed from the solenoid valve which opens the vent.

2) This allows the pneumatic servo to de-pressurize and spring force opens the metering valve. This permits anti-ice airflow.

3) The sensing switch contacts are closed causing the ENG 1/ENG 2 advisory lights on the ANTI-ICE panel to illuminate.

b. Start and low power

(1) During start and low power operations, the HMU positions the cam plate in the down position opening the metering valve.

(2) During start and low power operations the anti-ice/start bleed valve is controlled only by the HMU.

ANTI-ICE AND START BLEED VALVE OPERATION

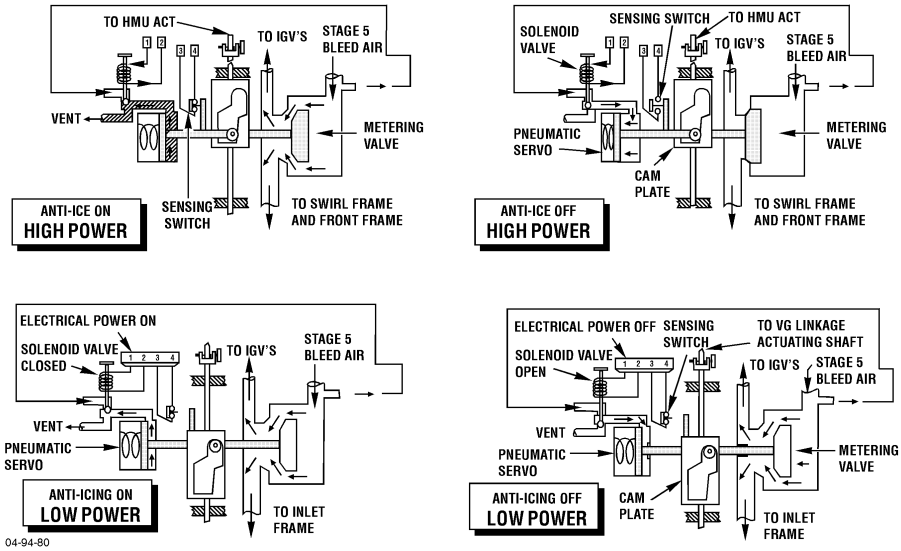

NOTES

(a) ENG INLET anti-ice switch OFF

1) The HMU positions the cam plate in the down position which holds the metering valve open. This permits anti-ice/start bleed airflow.

2) The sensing switch contacts are closed causing the ENG 1/ENG 2 advisory lights on the ANTI-ICE panel to illuminate.

3) When engine power is increased and the HMU determines that N_G speed and ambient temperature are sufficient, the HMU positions the cam plate in the up position allowing the metering valve to open or close as appropriate.

a) Since the ENG INLET anti-ice switch is in the OFF position, electrical power is applied to the solenoid valve which closes the vent.

b) 5th stage bleed air pressurizes the pneumatic servo and closes the metering valve, stopping anti-ice airflow.

c) The sensing switch contacts are opened causing the ENG 1/ENG 2 advisory lights on the ANTI-ICE panel to extinguish.

(b) ENG INLET anti-ice switch ON

1) The HMU positions the cam plate in the down position which holds the metering valve open. This permits anti-ice/start bleed airflow.

2) The sensing switch contacts are closed causing the ENG 1/ENG 2 advisory lights on the ANTI-ICE panel to illuminate.

3) When engine power is increased and the HMU determines that N_G speed and ambient temperature are sufficient, the HMU positions the cam plate in the up position allowing the metering valve to open or close as appropriate.

ANTI-ICE AND START BLEED VALVE OPERATION

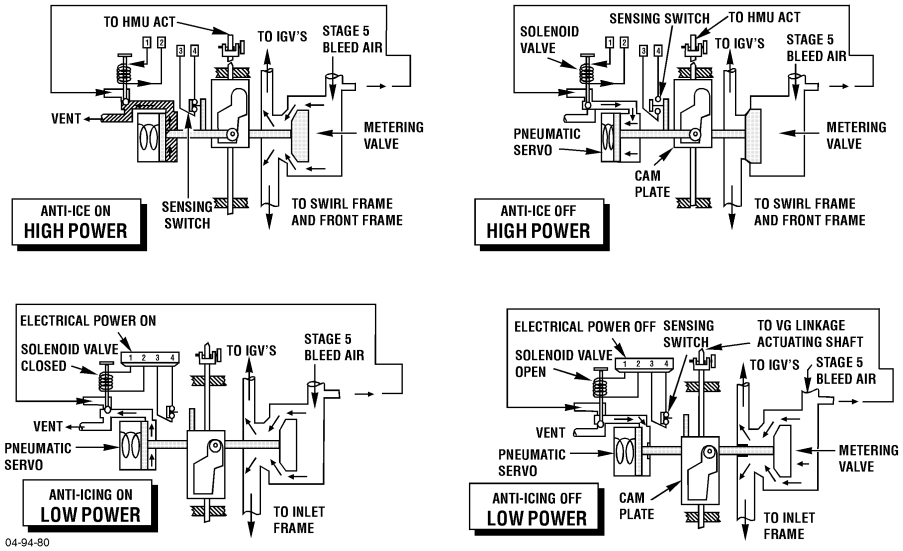

NOTES

a) Since the ENG INLET anti-ice switch is in the ON position, electrical power is removed from the solenoid valve which opens the vent.

b) This allows the pneumatic servo to de-pressurize and spring force opens the metering valve. This permits anti-ice airflow.

c) The sensing switch contacts remain closed causing the ENG 1/ENG 2 advisory lights on the ANTI-ICE panel to remain illuminated.

ANTI-ICE AND START BLEED VALVE (ALLIED SIGNAL GARRETT)

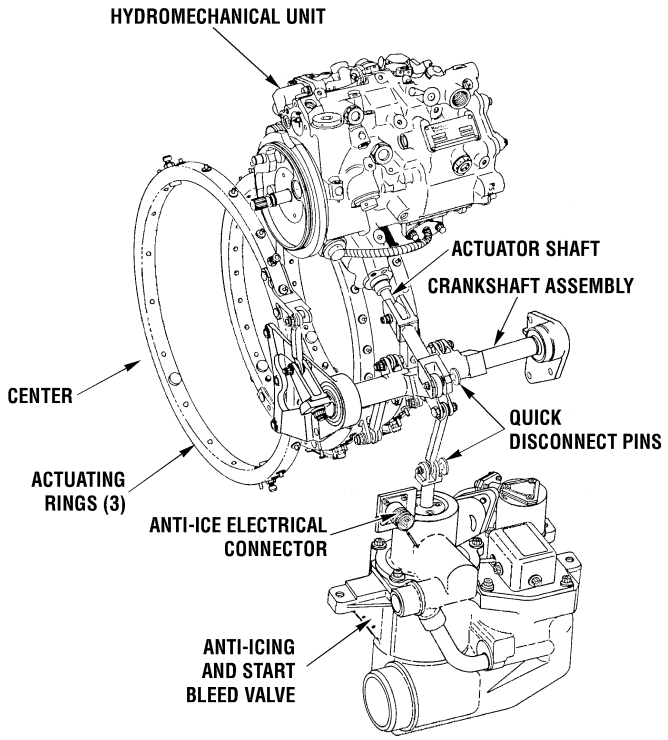

04-94-81

NOTES

3. Alternate type anti-ice and start bleed valve (Allied Signal Garrett)

   a. Mounts exactly as the other valve.

   b. Start bleed and anti-ice valve functions as two separate valves.

   c. Operation.

NOTE: With the alternate type start/bleed valve installed, the ENG 1/ENG 2 advisory lights on the ANTI-ICE panel illuminate under the same conditions as the regular anti-ice and start bleed valve. This is a modification to the alternate type anti-ice and start bleed valve and was made to avoid confusion in the field. The modification is not shown in the illustrations.

ALTERNATE ANTI-ICE/ START BLEED VALVE OPERATION (STARTING AND LOW POWER)

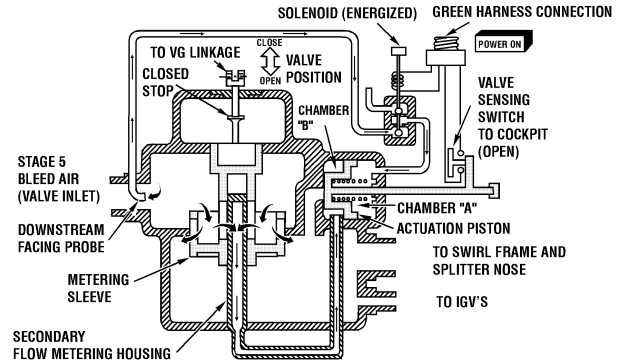

ANTI-ICE/START BLEED VALVE (ALTERNATE) (STARTING AND LOW POWER, ANTI-ICE OFF)

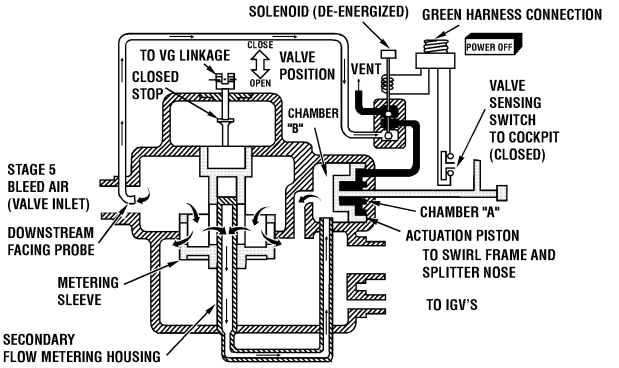

ANTI-ICE/START BLEED VALVE (ALTERNATE) (STARTING AND LOW POWER, ANTI-ICE ON)

04-94-82

NOTES

(1) Starting and low power - anti-ice OFF

(a) HMU has positioned the metering sleeve to open, allowing bleed air to flow to swirl frame, splitter nose, and IGV's.

(b) The solenoid is energized, allowing bleed air to travel to chamber"A" where it acts against a spring and closes off chamber "B".

(2) Starting and low power - anti-ice ON

(a) The solenoid is de-energized, closing off bleed air to chamber "A".

(b) The spring now moves the actuation piston separating chamber "A" from "B".

(c) Chamber "B" is now open allowing bleed air to flow downstream to anti-icing areas.

071-

ALTERNATE ANTI-ICE/ START BLEED VALVE OPERATION (HIGH POWER)

04-94-83

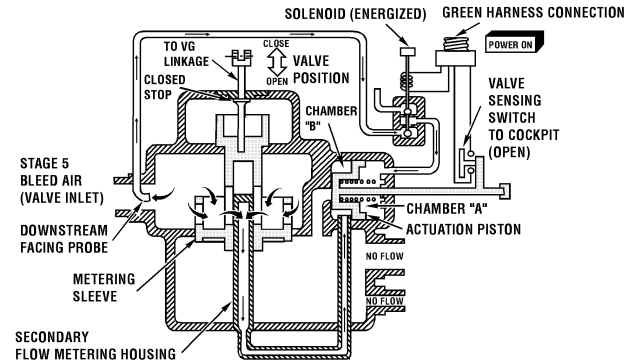

ANTI-ICE/START BLEED VALVE (ALTERNATE) (HIGH POWER, ANTI-ICE OFF)

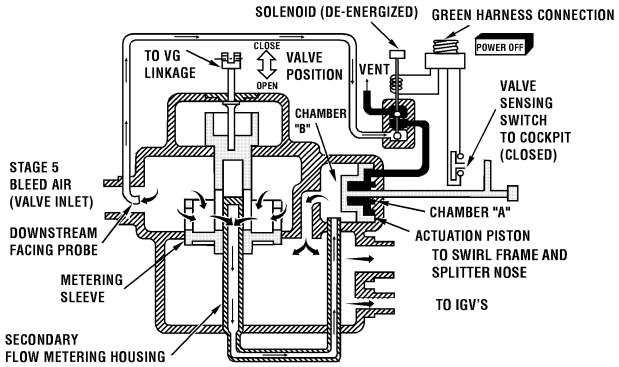

ANTI-ICE/START BLEED VALVE (ALTERNATE) (HIGH POWER, ANTI-ICE ON)

NOTES

(3) High power - anti-ice OFF. All systems have closed bleed air flow.

(4) High power - anti-ice ON

(a) Start bleed metering sleeve is closed.

(b) Anti-ice is on and operating as explained earlier.

ANTI-ICING VALVE AND MANIFOLDS

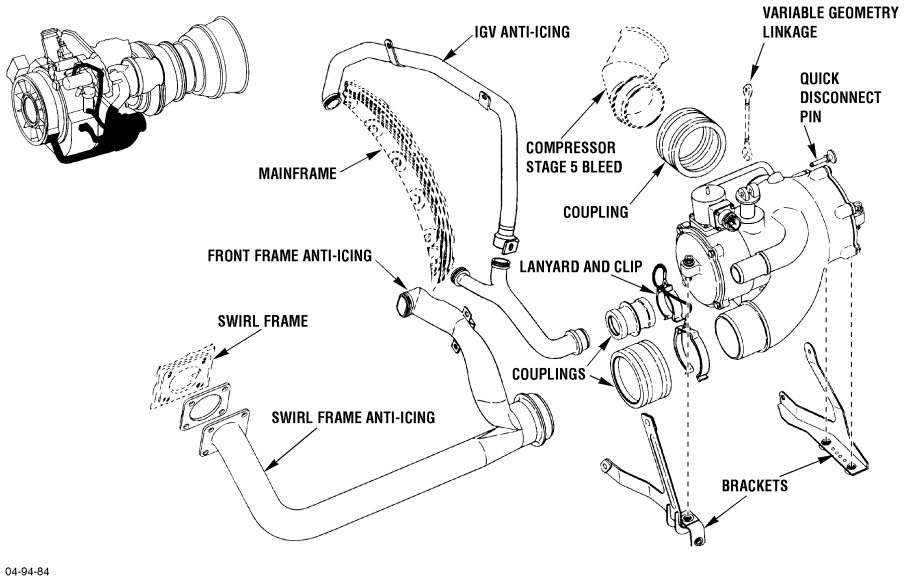

NOTES

4. Anti-ice/start bleed valve installation

   a. Manifolds - carry the anti-ice/start bleed valve air to the swirl frame and inlet guide vanes.

   b. Couplings - provide attachment of the manifolds to the anti-ice/start bleed valve.

   c. Lanyard and clips - secure the manifold to anti-ice/start bleed valve.

   d. Quick disconnect pins - secure the variable geometry linkage to the anti-ice/start bleed valve.

   e. Brackets - support the anti-ice/start bleed valve installation.

071-0

ENGINE ANTI-ICE

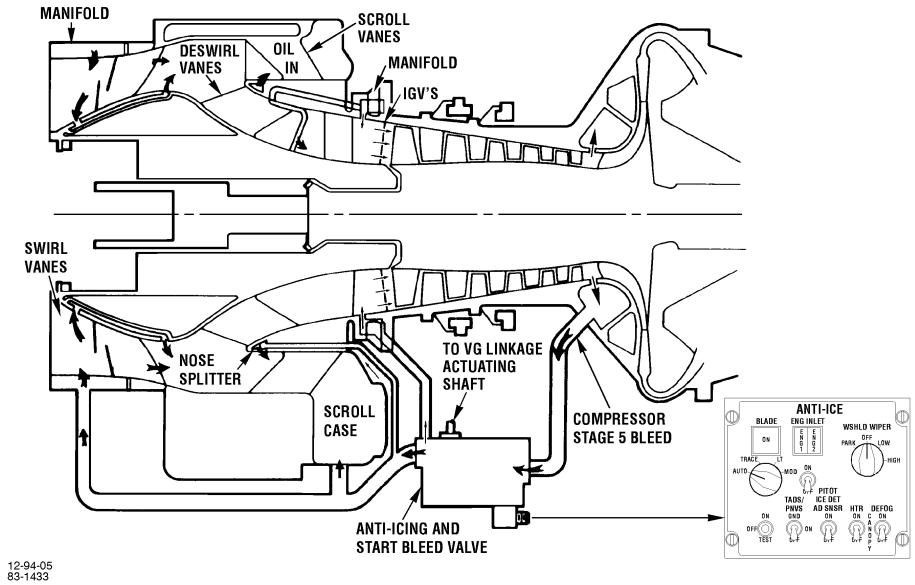

NOTES

5. Anti-ice system airflow

a. Axial compressor discharge air (5th stage bleed air) is tapped from the compressor casing at the 7:00 o'clock position and routed to the anti-ice/start bleed valve.

b. If the anti-ice/start bleed valve is open, air is delivered to the swirl frame, front frame, and inlet guide vanes via ducting.

(1) Within the swirl frame, hot air is ducted around the casing to each swirl vane. The air is circulated in each vane and then exits in two areas.

(a) 90% of the air exits at the swirl vane trailing edges.

(b) 10% of the air exits through a series of holes at the aft edge of the swirl frame hub.

(2) To anti-ice the front frame, hot air flows through a passage in the main frame to the front frame nose splitter. The air exits to the main frame scroll case and is discharged with IPS blower air.

(3) Another branch of the anti-icing air duct is utilized to heat the inlet guide vanes. A manifold surrounds the aft flange of the main frame to distribute hot air to the hollow inlet guide vanes. Slots in the trailing edge of the vanes discharge the hot air into the compressor inlet.

ACTUATION SYSTEM

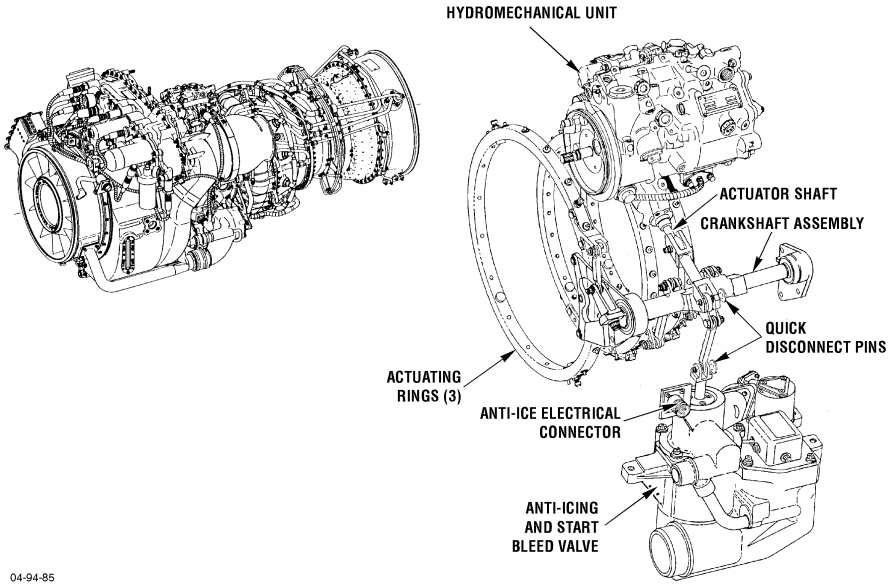

NOTES

6. Variable geometry (VG) linkage system

a. The variable geometry linkage system consists of:

(1) IGVs in the main frame

(2) Stage 1 and stage 2 compressor variable vanes

(3) Three actuating rings (one for each stage)

(4) Vane actuator levers (connects the individual vanes to their actuating ring)

(5) Actuating shafts

(6) Crankshaft assembly

b. The three actuating rings, vane levers, and vanes are actuated and synchronized by the crankshaft assembly. The crankshaft assembly also opens and closes the anti-ice/start bleed valve.

c. The V_G actuator in the HMU positions the crankshaft.

d. The V_G actuator in the HMU is positioned by a servo-system in the HMU. The servo-system responds to N_G, T2, and the physical position of the crank shaft.

e. Quick disconnect pins simplify component replacement.

ENGINE START AND IGNITION SYSTEM

MAJOR COMPONENTS

- AIR TURBINE STARTER
- AIR PRESSURE REGULATOR AND SHUTOFF VALVE
- STARTER SPEED CUTOUT SWITCHES
- PILOTs POWER QUADRANT

83-2122aB

NOTES

A. Engine start subsystem

1. The engine start subsystem uses air from the PAS and provides a means for starting each engine.

2. The engine start subsystem rotates the compressor through the accessory gearbox until the engine reaches a speed that permits it to be self-sustaining.

3. The major components of the engine start subsystem include the:

   a. Starter speed cutout switch

   b. Air pressure regulator and shutoff valve

   c. Air turbine starter (ATS)

   d. Pilot's power quadrant

      (1) Master ignition switch

      (2) No. 1 and No. 2 ENG START/IGN/OVRD switches

      (3) No. 1 and No. 2 ENG START lights

AIR PRESSURE REGULATOR AND SHUTOFF VALVE/STARTER SPEED CUTOUT SWITCHES

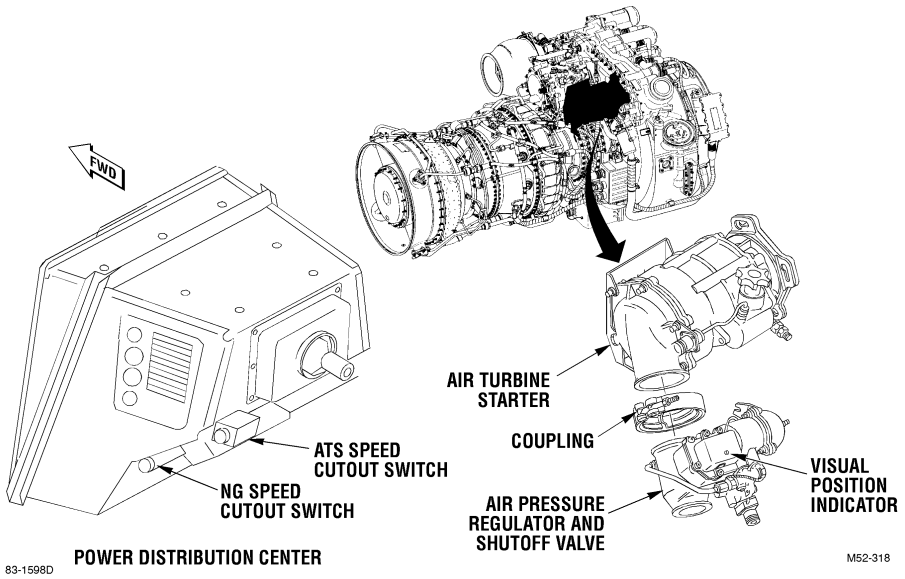

NOTES

B. Component description

1. Air turbine starter speed cutout switch and engine Ng speed cutout switch

   a. The switches disengage the engine start circuit when the engine has started and reached a self-sustaining speed. (Approximately 52% N_G)

   b. Installed in the aft section of the electrical power distribution center.

   c. One switch is operated by ATS speed; it receives a signal from the monopole on the starter.

   d. The other switch is operated by N_G speed; it receives a signal from the engine driven alternator.

2. Air pressure regulator and shutoff valve

   a. Provides air in the required amounts from PAS to the air turbine starter.

   b. Air-actuated solenoid controlled valve.

   c. Spring loaded closed.

   d. Operated by the No. 1 and No. 2 ENG START/OFF/IGN OVRD switches.

AIR TURBINE STARTER LOCATION

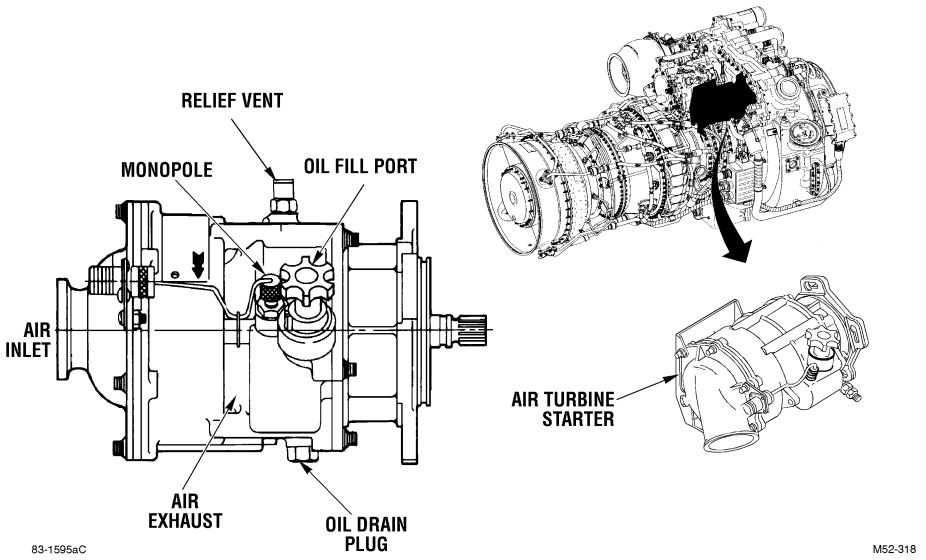

NOTES

3. Air turbine starter (ATS)

   a. The ATS rotates the compressor through the accessory gearbox until the engine reaches an Ng speed that permits it to be self-sustaining.

   b. Mounted on the rear of the accessory gearbox, right side.

   c. Powered by PAS air.

   d. The ATS incorporates a self-contained, wet sump oil system.

      (1) Holds 200 cc of MIL-L-23699 oil, or MIL-L-7808 when ambient air temperature is below -25EF (-32EC).

      (2) Oil can be drained through a drain plug at the bottom of the starter.

AIR TURBINE STARTER

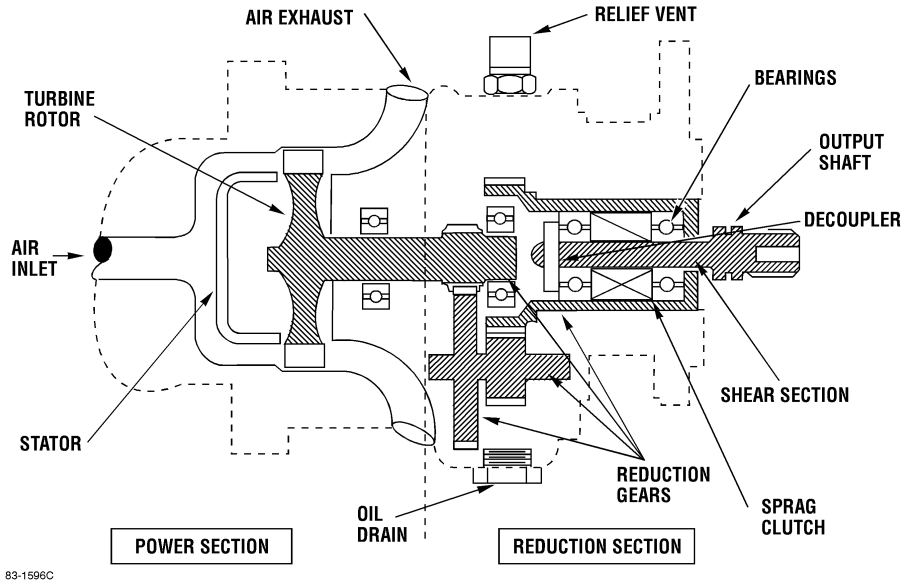

NOTES

e. The ATS has a power section and a reduction section.

(1) The power section is made up of an air inlet, stator, turbine rotor, and air exhaust.

(2) The reduction section is made up of four reduction gears, a sprag clutch assembly, output shaft, bearing, and the monopole.

f. The ATS has a decoupler installed in the output shaft that disengages the ATS from the engine if the sprag clutch fails to disengage or if too much air pressure is applied at the starter inlet.

g. To prevent an over-torque condition to the engine, the starter output shaft has a shear section that shears if the starter torque exceeds 500 inch-pounds.

STARTER DRIVE TRAIN

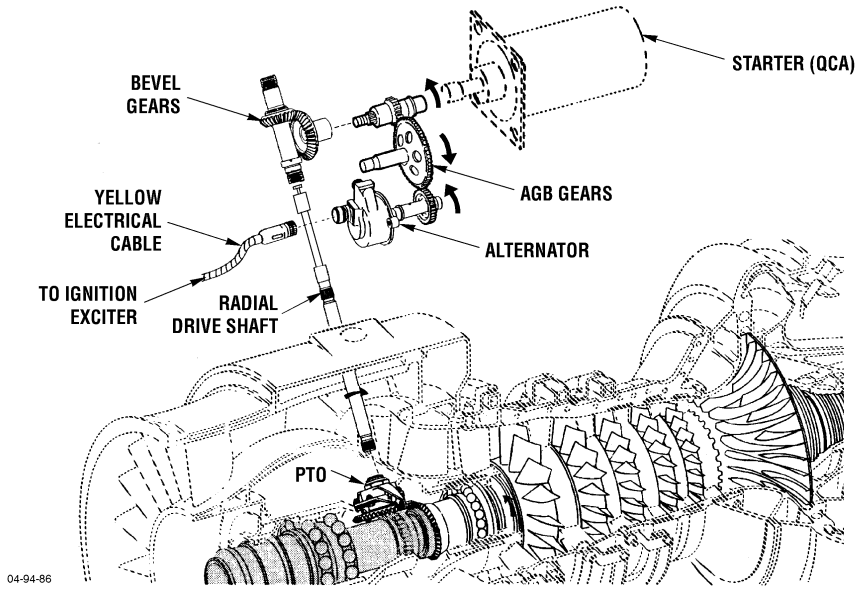

NOTES

h. Power is transmitted from the starter to the AGB, to the bevel gears. The bevel gears turn the radial shaft. The radial shaft turns the PTO, which turns the engine compressor.

071-0

SPRAG CLUTCH

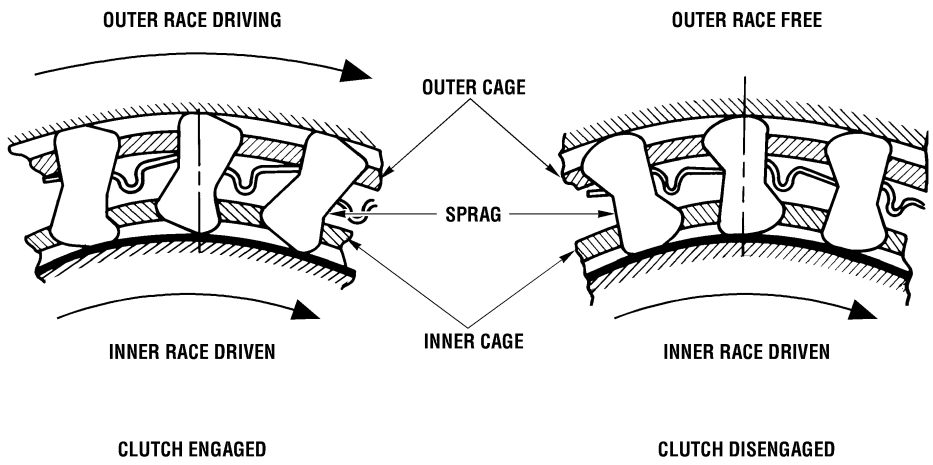

04-93-04
83-2902

NOTES

i. Sprag clutch

(1) A one-way sprag clutch allows the turbine wheel to drive the output shaft.

(2) The sprag clutch engages when the starter torque is applied to the outer race. The sprags move with a rolling cam action, and being larger than the space between the inner and outer races, the sprags wedge between the races.

(3) When the starter turbine stops driving, the inner race overruns the outer race; the sprags roll out of engagement, and the turbine stops.

071-0

STARTING SYSTEM OPERATION

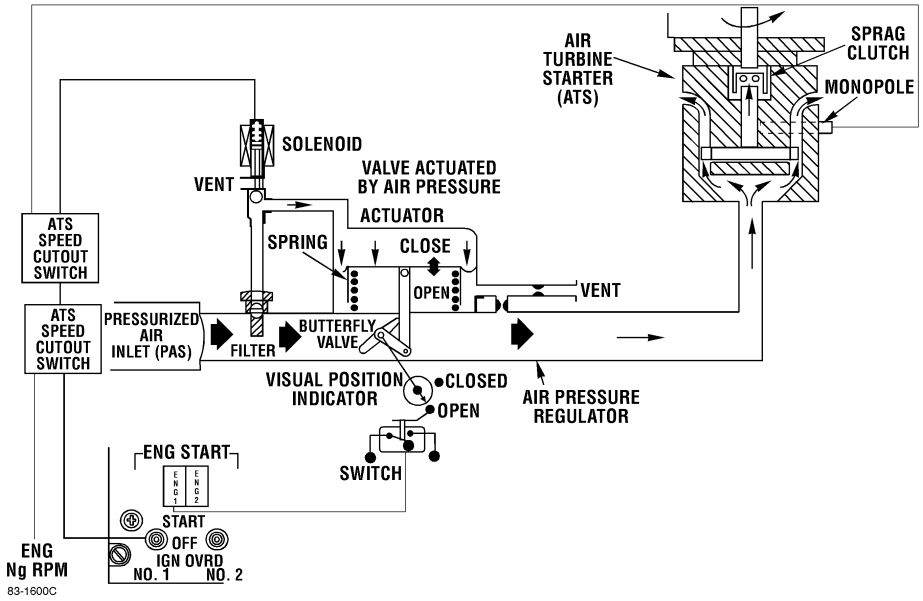

NOTES

j. Starting system operation

(1) The master ignition ON/OFF switch is turned on with a key to energize the starting system in an automatic mode.

(2) When either of the ENG START switches is placed to start, the air pressure regulator and shutoff valve solenoid is energized to close the vent and open the actuator chamber.

(3) Pressurized air from the PAS system flows through the solenoid shutoff valve and into the valve actuator chamber to compress the spring and open the butterfly valve, venting trapped air. Orifices in the vent prevent rapid movement of butterfly.

(4) When the butterfly valve opens, a visual indicator on the valve indicates open and an electrical switch causes the ENG 1 or ENG 2 light on the power quadrant to light.

(5) PAS air drives the air turbine starter. With the turbine rotating, the sprag clutch engages the output shaft.

(6) The starter drives the engine accessory gearbox and the N_G and compressor section of the engine.

(7) Fuel is atomized and ignition and combustion occurs.

(8) The ATS speed cutout switch and the engine N_G speed cutout switch provide a holding circuit. This holding circuit keeps the automatic start sequence energized when the start switch is released and returns to the center OFF position.

(9) The ATS speed cutout switch monitors starter speed and maintains the holding circuit output until ATS RPM reaches approximately 52 percent.

(10) The engine N_G speed cutout switch monitors engine gas generator speed and maintains the holding circuit until N_G speed reaches approximately 52 percent.

(11) The two switches should activate at the same time. When either switch opens, the start sequence is terminated.

(12) When the ENG START switch is placed to the IGN OVRD position, the air turbine starter rotates the engine, but the ignition system is inoperative.

ENGINE COOLING SYSTEM COMPONENTS

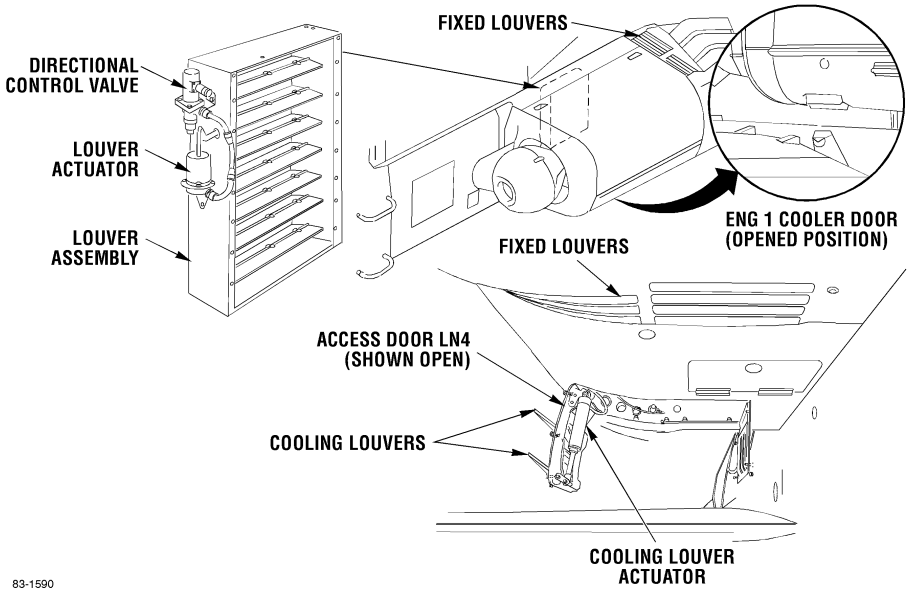

NOTES

A. Engine cooling system

1. The engine cooling system provides engine cooling and nacelle ventilation during engine operation and cooling airflow after shutdown.

2. Engine cooling system components

a. Louver assembly

b. Louver actuator

c. Directional control valve

d. Cooling louvers

e. Fixed louvers

B. Engine cooling component description and operation

FIREWALL LOUVER ASSEMBLY OPERATION

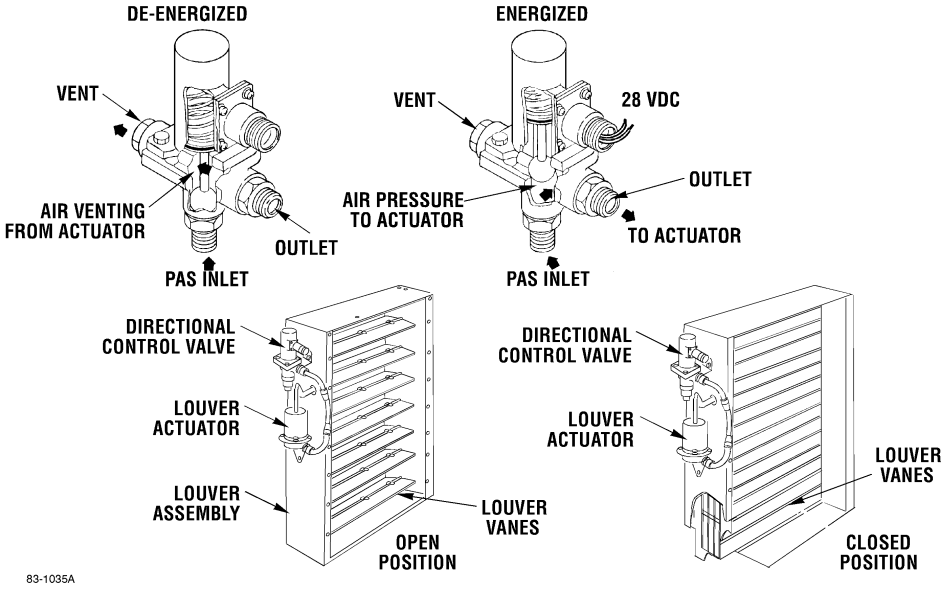

NOTES

1. Louver assembly

   a. Opens to allow airflow from main transmission area to the engine nacelles.

   b. Closes to isolate engine nacelle in the event of fire.

   c. The louver assembly is mounted on the firewall between each of the nacelles and the aft equipment bay.

   d. A rectangular box frame with movable horizontal vanes.

   e. Major components of the louver assembly are the louver actuator and directional control valve.

      (1) Louver actuator

         (a) Opens the louver assembly for airflow or closes the louver assembly to shut off airflow in the event of a fire in the engine compartment.

         (b) The louver actuator is mounted on the rear of the left louver assembly and on the front of the right louver assembly.

         (c) A pneumatic actuator, spring-loaded to the extended position.

      (2) Directional control valve

         (a) Controls pressurized air to louver actuators.

         (b) Mounted on the rear of the left louver assembly and on the front of the right louver assembly.

         (c) An electrically actuated, three-way, pneumatically controlled valve.

   f. Louver assembly operation

      (1) When the ENG FIRE PULL handle is pulled, an electrical control valve energizes a solenoid and allows PAS air to enter the louver actuator and close the louver assembly.

      (2) When the solenoid is de-energized, PAS airflow is shut off and the louver actuator pressure vents overboard. This allows a spring to move the actuator and open the louvers.

COOLING LOUVER

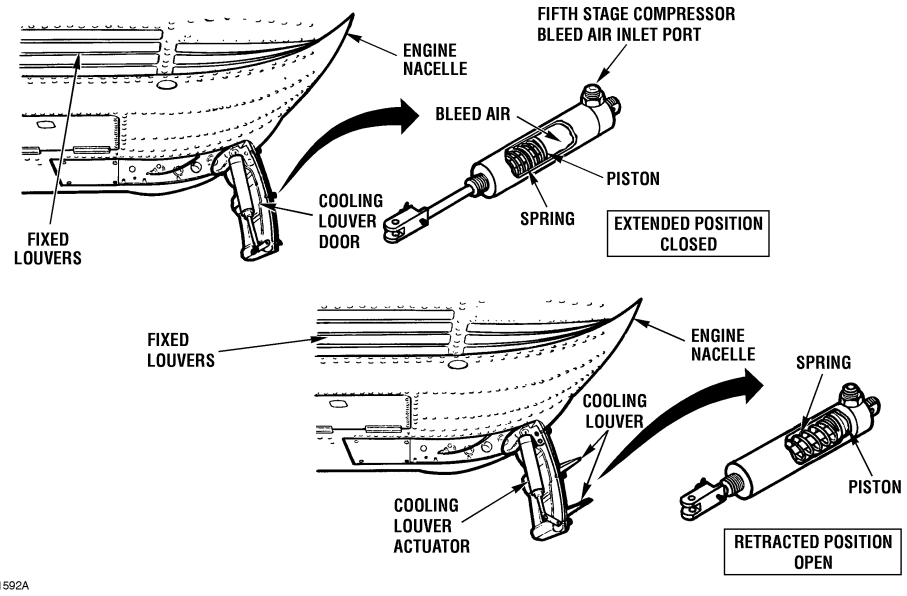

NOTES

2. Cooling louvers

   a. Open when engines are shut down to provide cooling airflow.

   b. The cooling louvers are mounted on the bottom of access doors attached to the lower portion of the engine nacelles.

   c. The cooling louvers are movable louver-type vanes that are actuated by the cooling louver actuator.

      (1) Fifth-stage compressor bleed air compresses the actuator piston spring to close the cooling louvers during engine operation.

      (2) When the engine is shutdown, 5th stage bleed air is removed allowing internal spring tension to extend the actuator piston and open the cooling louvers.

3. Fixed louvers

   a. Provide openings into nacelle for cooling airflow during flight.

   b. The fixed louvers are located on the top and bottom of the aft section of the nacelle.

   c. Fixed air scoops that are angled forward.

   d. Honeycomb filter prevents foreign objects from entering nacelle.

071-0

ENGINE EXHAUST SYSTEM COMPONENTS

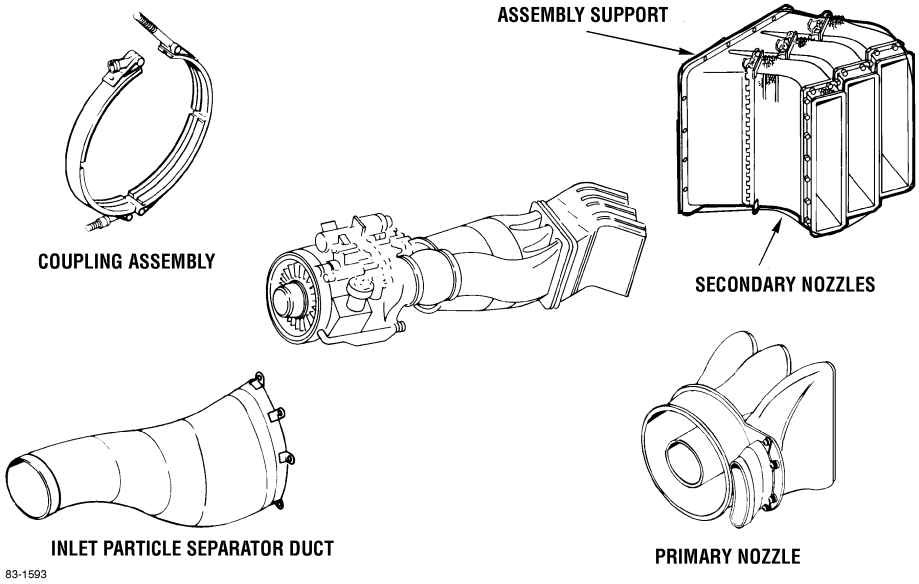

NOTES

C. Engine exhaust system

1. The engine exhaust system (infrared (IR) suppression system) mixes hot exhaust gases with engine cooling airflow to reduce exhaust gas temperature.

2. The exhaust system, by use of structural angles, masks the hot internal engine components from view.

3. The engine exhaust components include:

a. Inlet particle separator transition duct

b. Primary nozzle

c. Support assembly secondary nozzle

d. Secondary nozzles

e. Coupling assembly

D. Engine exhaust system component description and operation

1. Inlet particle separator transition duct

a. Provides exit path for debris from the inlet particle separator, and additional cooling air for engine exhaust gas temperature.

b. The inlet particle separator transition duct is mounted on the left side of the engine, retained by a coupling assembly.

c. Constructed of stainless steel.

2. Primary nozzle

a. Provides a path for engine exhaust gas airflow.

b. Creates an ejector pumping action.

c. The primary nozzle is attached to the engine exhaust frame by a V-band coupling assembly.

d. The primary nozzle is a welded assembly consisting of a corrosion-resistant titanium annular duct and four outlet nozzles.

e. The exterior surface of the primary nozzle is covered with "Low Q" insulation to prevent heat transfer from the primary nozzle to the nacelles.

071-0

ENGINE EXHAUST SYSTEM COMPONENTS

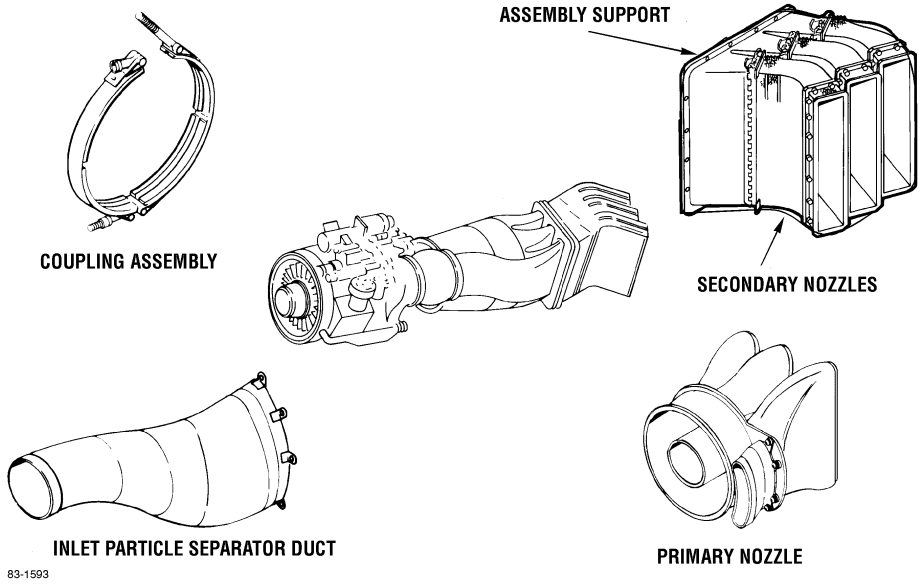

NOTES

(1) "Low Q" insulation is layers of flexible heavy aluminum sandwiching layers of wire mesh screen.

(2) ECP 978 deleted the "Low Q" insulation from the IR suppression system primary nozzle. Originally, the insulation was installed to eliminate hot metal line-of-sight exposure and provide thermal shielding for the surrounding structure. The inlet cuff area of the primary nozzle had never been insulated, which suggested that "Low Q" insulation on the rest of the nozzle wasn't necessary. To prove this theory, Value Engineering conducted analysis to determine the feasibility of removing the insulation. Examination of the temperature and thermo-vision test data showed no measurable differences in the IR signature or loss of aft engine nacelle area structural integrity. The results of the testing indicated the "Low Q" insulation wasn't necessary. A substantial savings in cost and maintenance man hours resulted from implementation of ECP 978.

(3) Aircraft serial number 87-0479 and subsequent have the non-insulated IR suppression system primary nozzle installed. Aircraft prior to 87-0479 are equipped with the insulated nozzle and shall be changed through attrition.

3. Support assembly secondary nozzle

a. Supports secondary nozzles

b. Riveted to the rear of each nacelle between the primary nozzle and the secondary nozzle.

c. Made of aluminum alloy

4. Secondary nozzles

a. Mixes exhaust gases from engine with ambient air for exhaust gas cooling.

b. The secondary nozzles are mounted at the rear of the nacelle and attached to the rear of the secondary nozzle support assembly.

c. Three individual angled, finned aluminum exhaust nozzles.

d. The insides of the exhaust nozzles are painted with a low reflectivity paint to reduce infrared (IR) signature.

ENGINE COOLING AND EXHAUST SYSTEM OPERATION

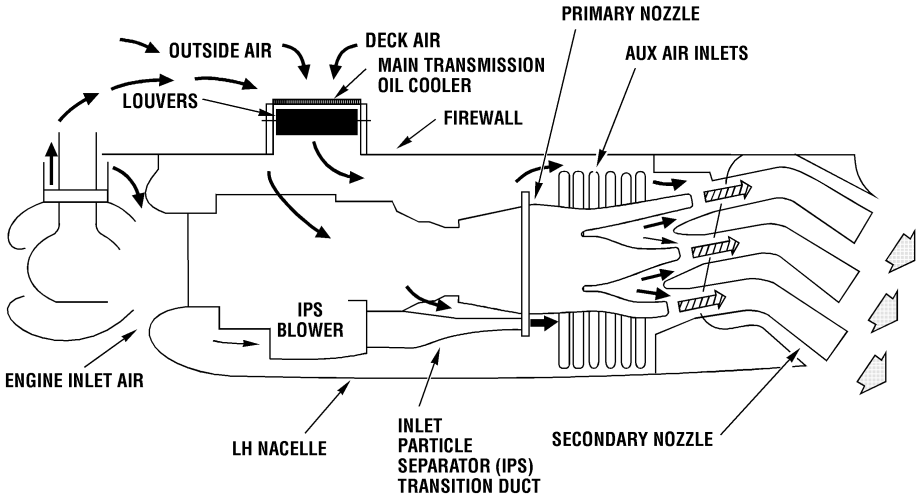

83-1594A

NOTES

E. Engine cooling and exhaust system operation:

1. The engine cooling and exhaust systems work together.

   a. The exhaust system assists the engine cooling airflow.

   b. The engine cooling air cools the exhaust gases and components.

2. The engine exhaust gases flowing through the primary nozzle create an ejector pumping action that draws cooling air surrounding the engine into the flow of the exhaust gases.

3. This creates a low-pressure area inside the nacelle which causes cool outside air to flow into the nacelle to cool the engine.

4. Outside cool air enters the nacelle through the normally open louver assembly and flows around the engine.

5. Cooling air also enters the nacelle through the upper and lower fixed louvers, and inlet particle separator transition duct.

6. The ejector pumping action within the secondary nozzles draws the cooling air into the secondary nozzles where it mixes with the hot exhaust gases and cools the gases.

7. The cooled exhaust gases exit the secondary nozzles and are immediately dispersed by main rotor downwash.

8. Cooling fins on the secondary nozzles aid in cooling the secondary nozzles at a very rapid rate.

9. The use of angles in the secondary exhaust nozzles blocks the view of hot internal engine components.

ENGINE MOUNTS

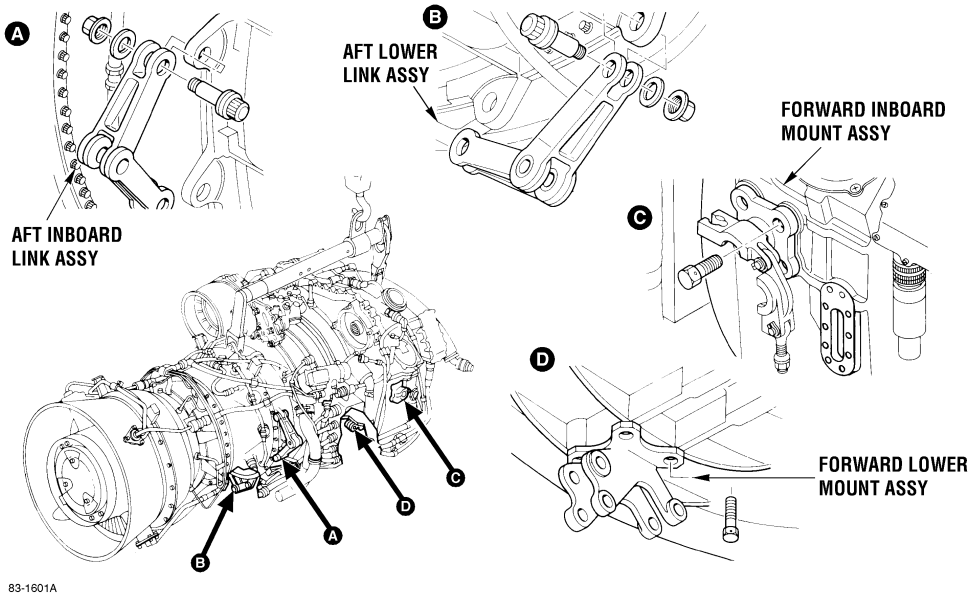

NOTES

A. Engine mounts

1. Engine mounts support the engine.

PRIMARY ENGINE MOUNTS

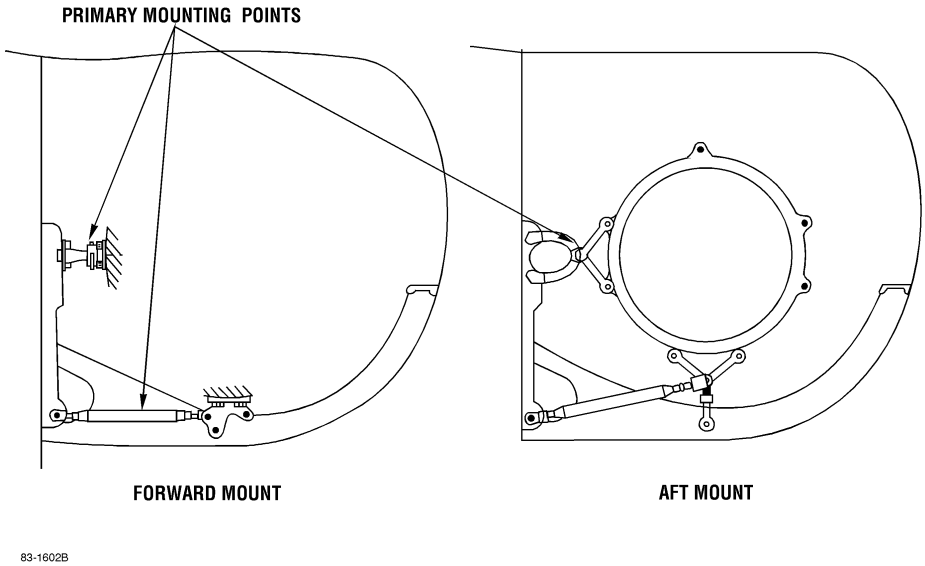

NOTES

2. Primary engine mounts

a. Forward inboard mount

(1) Provides support for vertical and side engine loads.

(2) Attached to the main engine frame.

(a) Number 1 engine - at the 3 o'clock position.

(b) Number 2 engine - at the 9 o'clock position.

(3) Consists of an engine mount and support that forms a ball and socket.

(a) The airframe support is the ball.

(b) The engine mount is the socket.

b. Forward lower mount

(1) Provides support for side and vertical loads.

(2) Attached to the engine main frame at the 6 o'clock position.

(3) Adjustable rod assembly, attached to the lower, forward engine support by a support pin on the forward lower mount.

SECONDARY ENGINE MOUNTS

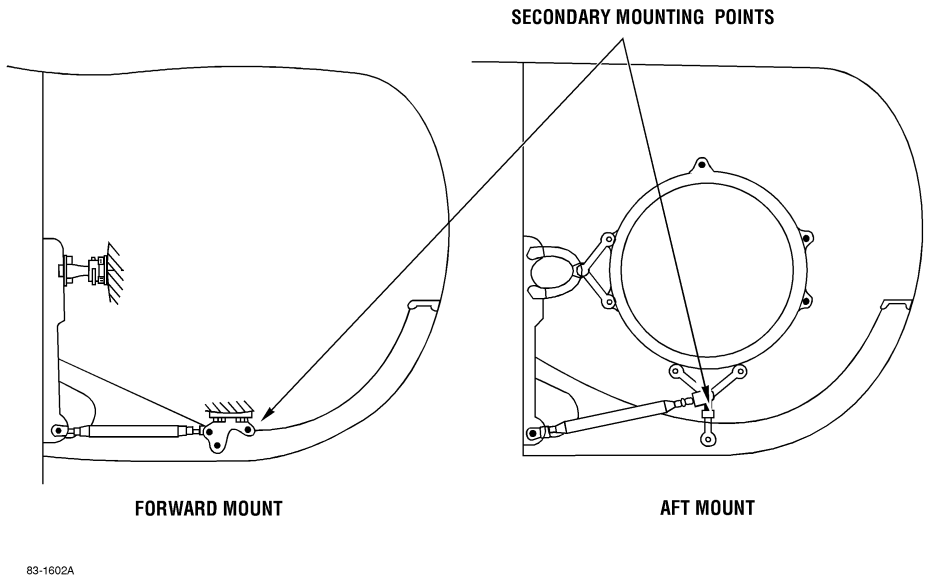

NOTES

3. Secondary engine mounts

a. Aft lower mount and link assembly

(1) Supports vertical loads.

(2) Attached to the diffuser case at the 6 o'clock position.

(3) A clevis link attaches the mount and rod to the engine nacelle structure by a quick-release support pin.

(4) Aft lower rod assembly

(a) Supports side loads.

(b) An adjustable rod assembly attached to the aft, lower engine support and aft, lower link assembly.

b. Forward lower mount

(1) Provides support for side and vertical loads.

(2) The two lower and outboard points of the mount attach to the nacelle.

(3) These two smaller attaching points provide secondary support should a primary support fail.

POWER QUADRANTS

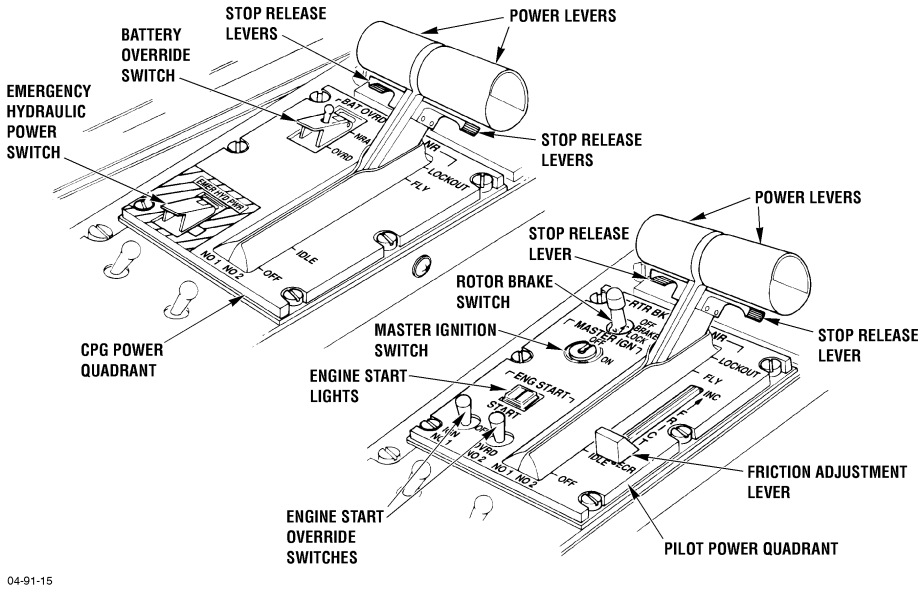

NOTES

A. Engine controls

1. The engine controls in the cockpit provide:

a. Mechanical inputs to the HMU for scheduling the proper amount of fuel required to meet all operating power demands.

b. Electrical inputs to the ECU to aid in controlling fuel flow.

c. A means to test the engine overspeed protection system.

2. The engine controls consist of:

a. Pilot's and CPG's power lever quadrants.

b. Pilot's and CPG's collective control sticks.

c. Turbine speed control unit.

d. Overspeed protection system test panel.

B. Component description and operation

1. Power quadrants

a. Power levers on the quadrants transmit power selections to the HMU. The pilot's quadrant provides engine start controls and indicators.

b. The power levers in both cockpits are connected together by flexible control cables. When the levers in one crewstation are moved, the levers in the other crewstation also move.

c. The power levers have 4 positions.

(1) OFF - 0 degrees of travel, no fuel flow to engines.

(2) IDLE - 26 degrees of travel, for low power ground operation.

(3) FLY - 120 degrees of travel, normal position for flight.

(4) LOCKOUT - 130 degrees of travel, stops the ECU's ability to control the HMU by internally "locking out" the torque motor circuit in the HMU. The engine must then be controlled manually by the pilot positioning the power levers between IDLE and FLY. Although the ECU no longer has any authority to control the HMU it still functions normally in every respect.

POWER QUADRANTS

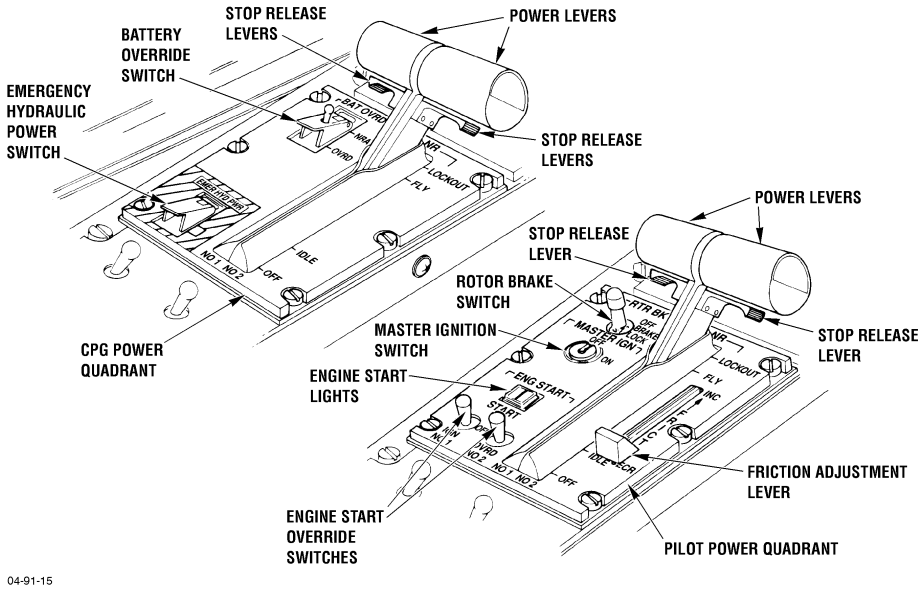

NOTES

d. The pilot's power quadrant has mechanical stops to prevent the power levers from accidentally being moved from FLY to LOCKOUT, or from IDLE to OFF. The mechanical stops are manually released by the stop release levers in the pilot's station and electrically released by the CPG's stop release levers. When the CPG operates the stop release levers, a solenoid in the pilot's power quadrant is electrically energized, which frees the mechanical stops.

e. When the rotor brake is on, a power lever locking solenoid is energized which prevents the power lever from being placed in the FLY position. In order to move the levers from IDLE to FLY, the rotor brake switch must be placed to OFF.

f. A set of micro-switches installed in the CPG's power quadrant enables the engine out warning system when the power levers are in the FLY position.

071-0

COLLECTIVE STICKS

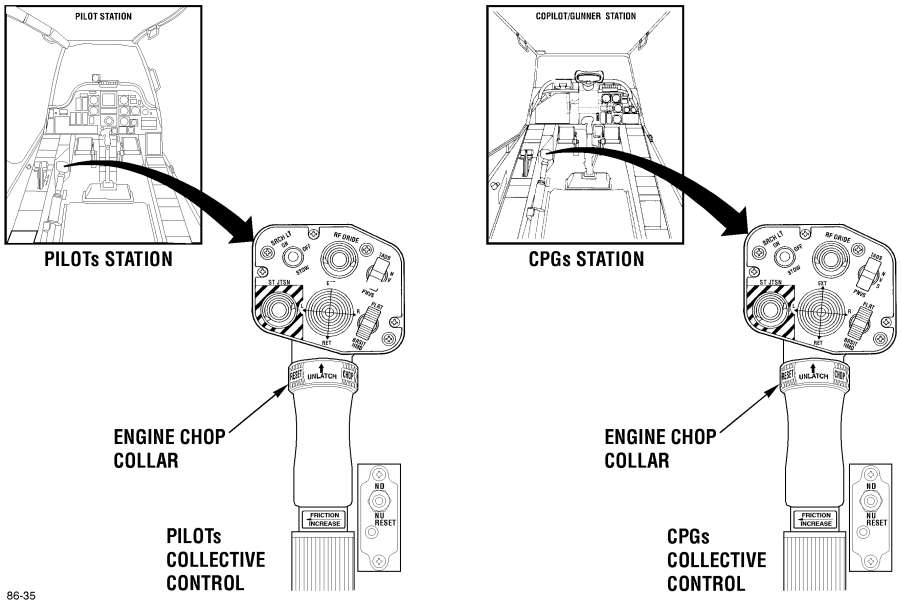

NOTES

2. Collective sticks. The collective stick controls the engine in three ways.

   a. Mechanical inputs to the engine are transmitted from the collective sticks to the HMU through the load demand spindle flexible cables.

   b. The chop collars allow the crewmembers a means to rapidly reduce both engines to idle simultaneously.

   c. Mounted at the bottom of the pilot's collective stick is the engine droop potentiometer.

      (1) When the collective is moved, the engine droop potentiometer supplies a signal to the ECU on both engines.

      (2) This signal prevents the engines from drooping during large power applications.

071-0

ENGINE CONTROL SYSTEM

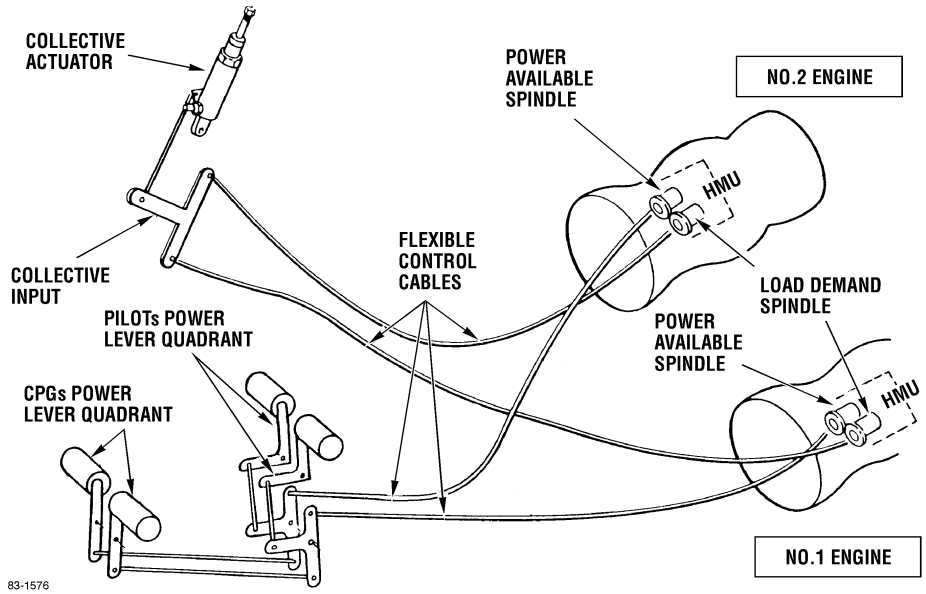

NOTES

3. Flexible control cables

a. The flexible control cables transmit control inputs from the power levers and collective control sticks to the HMU.

(1) There are six sections of control cables located between the power levers and the PAS gearboxes.

(2) There are four sections of control cables located between the collective bellcrank and the LDS gearboxes.

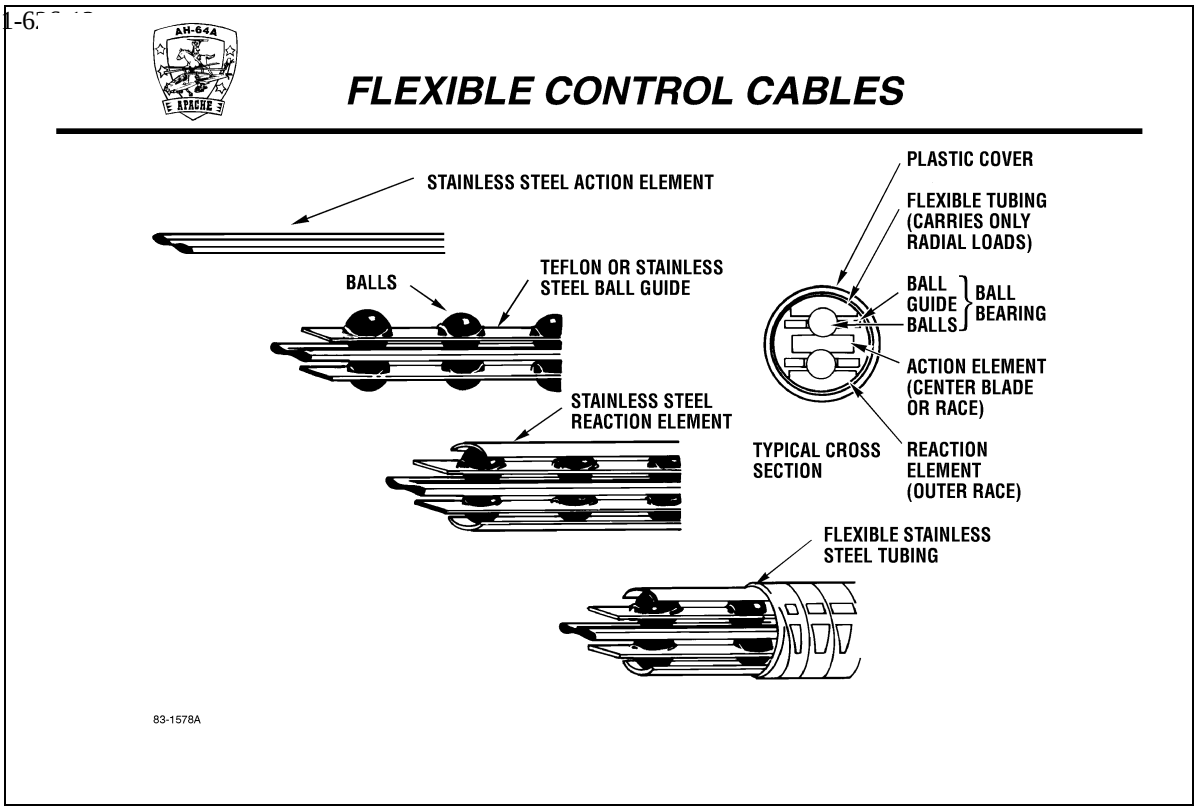
FLEXIBLE CONTROL CABLES
STAINLESS STEEL ACTION ELEMENT
BALLS
TEFLON OR STAINLESS STEEL BALL GUIDE
STAINLESS STEEL REACTION ELEMENT
FLEXIBLE STAINLESS STEEL TUBING
PLASTIC COVER
FLEXIBLE TUBING (CARRIES ONLY RADIAL LOADS)
BALL GUIDE BALLS
BALL BEARING
ACTION ELEMENT (CENTER BLADE OR RACE)
REACTION ELEMENT (OUTER RACE)
TYPICAL CROSS SECTION
83-1578A

NOTES

b. The flexible control cables are composed of balls, ball guides, and outer and inner races inside a flexible stainless steel tubing covered by plastic. The center element of the race is the action element that travels on balls to reduce friction.

SPINDLES

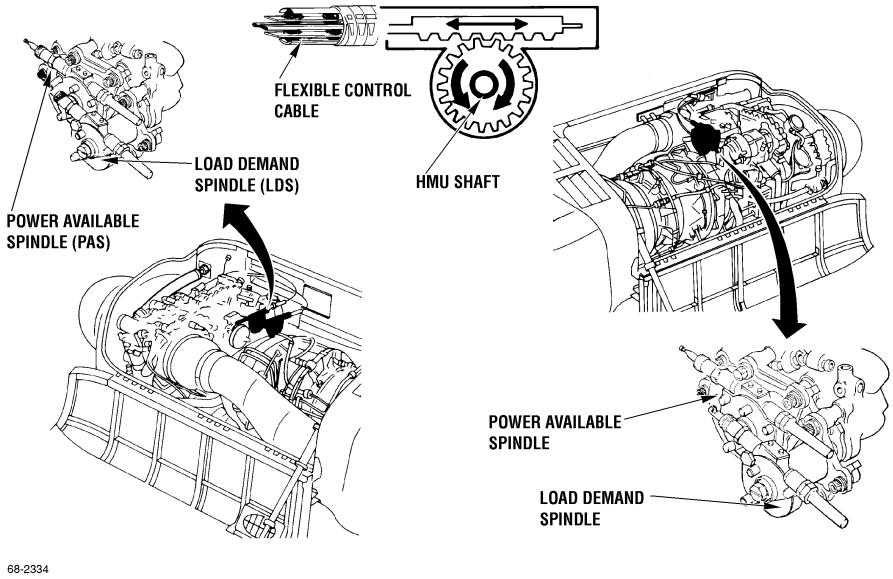

NOTES

4. Power available spindle (PAS) and load demand spindle (LDS)

   a. The PAS converts push-pull motion from the power levers to rotary motion for the HMU input shaft.

   b. The LDS converts push-pull motion from the collective control sticks to rotary motion for the HMU input shaft.

   c. The PAS and LDS are simple rack and pinion gearboxes.

   d. Rigging procedures - Spindle rigging procedures are outlined in TM 55-1520-238-23-3.

COLLECTIVE ENGINE DROOP POTENTIOMETER

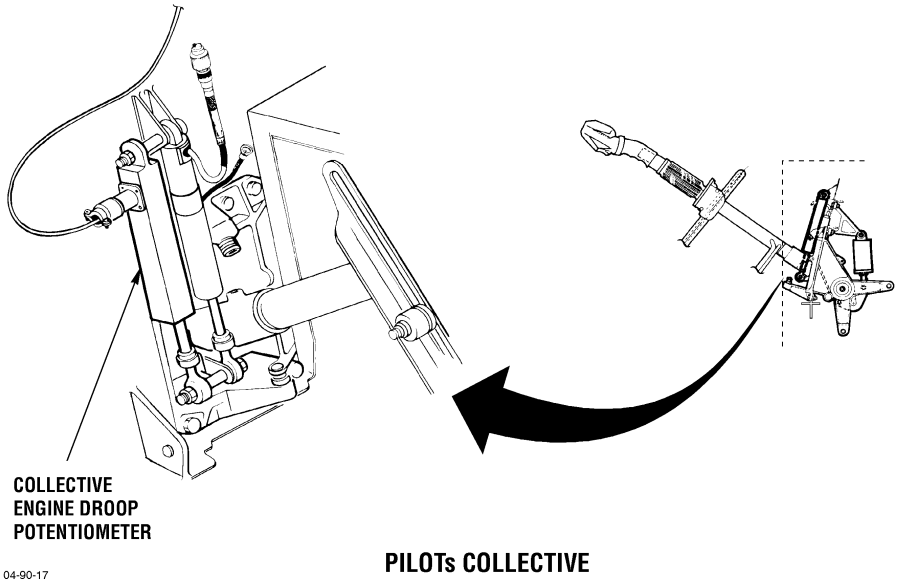

NOTES

5. Collective engine droop potentiometer

a. Provides an electrical signal to both engine ECUs/DECUs that is proportional to collective stick position.

b. Mounted between the collective bellcrank and the bulkhead in the pilot's crewstation.

c. The collective potentiometer is supplied " 15 VDC from both engine ECUs/DECUs.

(1) The output of the potentiometer is applied to both ECUs/DECUs, to aid in maintaining 100% N_p during power demand changes.

(2) As the collective is moved, the output of the potentiometer changes according to stick position.

d. Potentiometer adjustment - Maintenance procedures for potentiometer adjustment are outlined in TM 55-1520-238-23-3, paragraph 4-8-60 (Pilot Variable Resister Adjustment).

071-0

ENGINE CHOP CIRCUIT

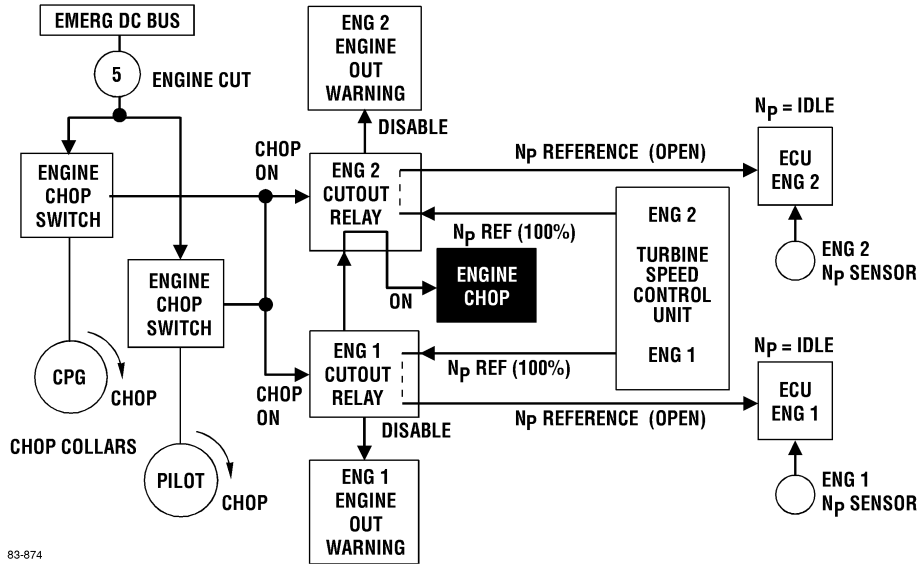

NOTES

6. Engine chop collar operation

WARNING

Extreme care must be taken not to actuate the engine CHOP system when the aircraft is in the air. Inadvertent actuation of the CHOP system could result in a total loss of the aircraft and death to the crewmembers.

a. Rotating either collar to the chop position applies 28 VDC to the emergency DC bus to the No. 1 and No. 2 engine cutout relays. When the cutout relays are energized they remove the N_P reference signal from the circuit to both ECUs.

b. When the ECUs do not receive an N_P reference signal, they read 100% N_P as 0 RPM. The ECU then attempts to reduce N_P to 0 RPM, but the engine will not go below idle.

c. The engine speed is not reduced below idle because the torque motor on the HMU cannot physically stopcock the HMU. This can only be done by moving the power control levers to OFF.

d. When the chop collar is pushed forward and rotated to the RESET position momentarily, the circuit is closed and the engines return to the previous power lever setting.

TURBINE SPEED CONTROL

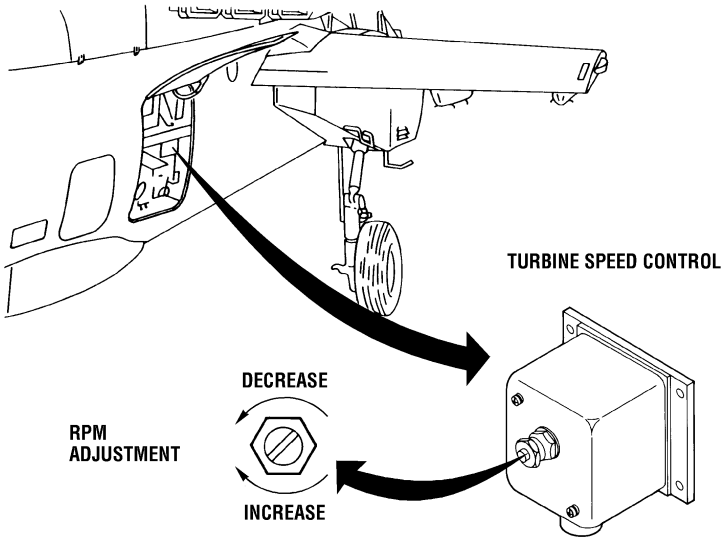

NOTES

7. Turbine speed control unit

a. The turbine speed control unit supplies the engine ECUs/DECUs with an N_P reference signal. This signal is what the ECUs/DECUs use as a basis for trimming the engines to 100% N_P during all operations while the power levers are in the FLY position.

b. Located in the aft avionics bay.

c. This signal is adjustable at the turbine speed control unit through one RPM adjustment screw.

(1) Turning the screw clockwise simultaneously moves two internal potentiometers (one for each engine), and increase the N_P of both engines.

(2) Turning the screw counterclockwise decreases the N_P of both engines.

Np OVERSPEED SYSTEM

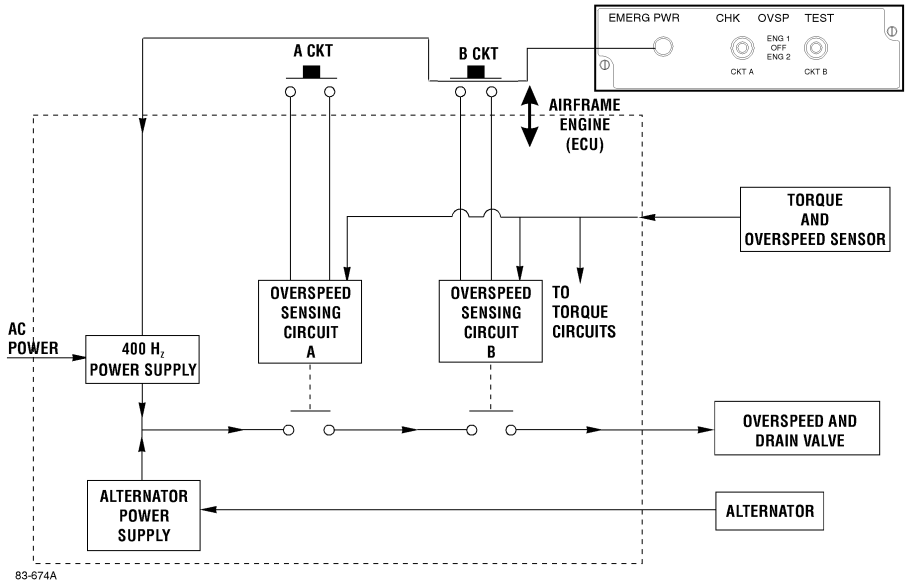

NOTES

8. Pilot's EMERG PWR CHK OVSP TEST panel

WARNING

The T700-GE-701/T700-GE-701C engine is designed to shut down when an overspeed condition is sensed. The OVSP TEST circuit trips at 95-97% N_P and should never be performed in flight. A power loss will result.

a. Normally, the overspeed protection system trips at 109-120% N_P. When testing the engine overspeed protection system, the system trips at 95-97% N_P.

b. In order to test the engine overspeed protection system, two circuits are used: CKT A and CKT B. Both circuits must be closed before the overspeed protection test system is activated.

c. When both circuits are closed, a signal is sent to the ECUs/DECUs. When the signal is received, the ECUs/DECUs cause the ODV to stop fuel flow to the combustor.

d. During the test mode, automatic ignition is applied and remains on for five seconds after the test switches are released. This ensures a positive relight when fuel flow resumes.

e. A green advisory light on the EMERG PWR CHK OVSP TEST panel indicates the availability of emergency airframe electrical power.

(1) The N_P overspeed protection system normally uses engine alternator power.

(2) The availability of emergency airframe power is checked with the CKT B switch.

f. Procedures to test the engine overspeed protection system are contained in TM 55-1520-238-MTF.

ENGINE INSTRUMENTS

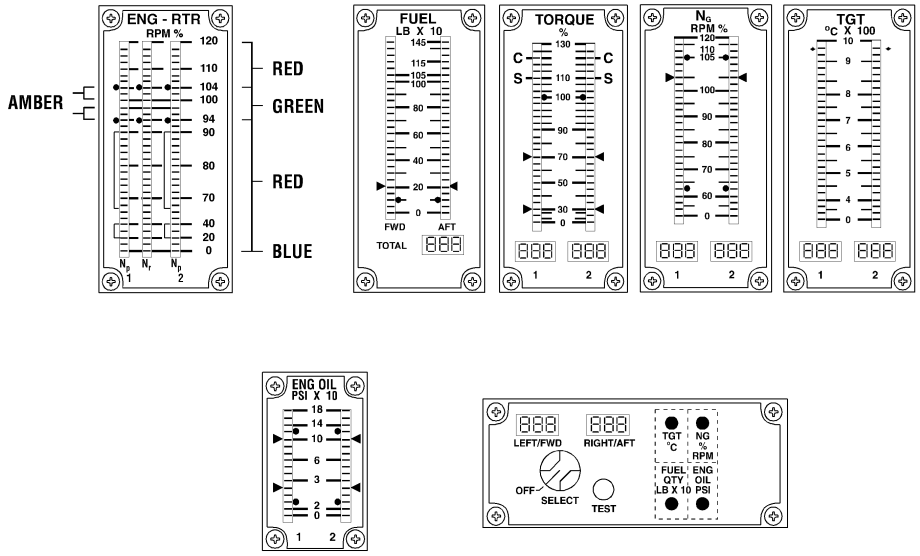

04-93-03

NOTES

C. Caution/Warning/Advisory Panels - The master caution warning panels, pilot's caution/warning/advisory (C/W/A) panel, and CPG's C/W/A panel provide indications of engine malfunctions.

MASTER CAUTION/WARNING PANEL

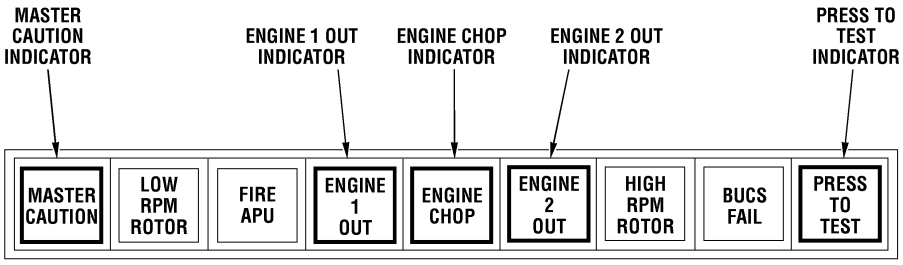

04-94-87

NOTES

D. Master caution warning panels

Pilot and CPG Master Caution/Warning Panels		
Word Segment	**Color**	**Illumination Parameter or Fault**
ENGINE 1 or 2 OUT	RED	Lights when N_P is below 94% or N_G is below 63% for engine 1 or 2 as appropriate. (N_P disabled when power lever is not in FLY). The ENGINE 1 or 2 OUT light is activated by a signal from the engine out warning unit (EOW). Each engine supplies the EOW with N_P and N_G speed signals. When activated, the light illuminates in the steady-on state and is accompanied by an audible tone in the intercommunications system (ICS). The audible tone is reset by pressing either ENGINE OUT warning switch-light.
ENGINE CHOP	RED	Indicates that both engines have been electrically retarded to idle. The ENGINE CHOP light is activated by a signal from the engine run/chop relay via the pilot matrix module. When activated, the light illuminates in the steady-on state and remains illuminated until the chop collar is reset. The light is not be accompanied by an audible tone (unless N_R decreases below 94%). The light is not accompanied by either ENGINE 1 and 2 OUT master caution/warning lights.

PILOT CAUTION/WARNING PANEL

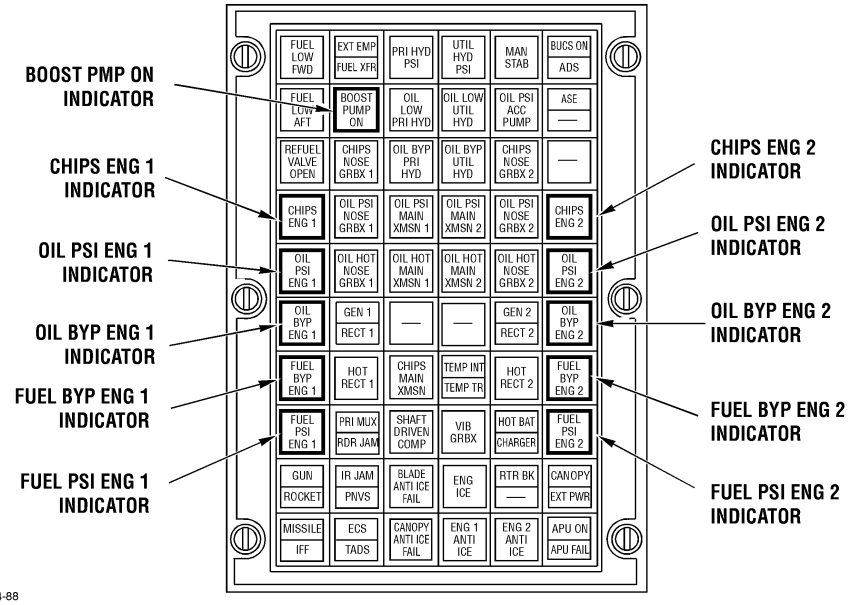

NOTES

E. Caution/warning/advisory panels

Pilot Caution/Warning/Advisory Panel		
Word Segment	**Color**	**Illumination Parameter or Fault**
BOOST PUMP ON	AMBER	Lights when the boost pump is providing 8 to 10 PSI to the engine fuel filter through the fuel line. When the boost pump pressure switch closes, it applies 28 VDC to the BOOST PUMP ON caution light causing it to illuminate.
CHIPS ENG 1	AMBER	Indicates that the engine 1 has metal fragments in the scavenge oil. The engine 1 chip detector switch senses the presence of metal chips in the oil. When large metal particles in the engine oil collect on the chip detector, a path to ground is completed, causing the caution light to illuminate.
CHIPS ENG 2	AMBER	Operates on the same parameters as the CHIPS ENG 1 caution light.
OIL PSI ENG 1	AMBER	Indicates that engine 1 oil pressure is below 25 PSI. When oil pressure drops below 25 PSI, the engine oil pressure indicator in the pilot's station, via the pilot matrix module, supplies a ground causing the caution light to illuminate.
OIL PSI ENG 2	AMBER	Operates on the same parameters as the OIL PSI ENG 1 caution light.
OIL BYP ENG 1	AMBER	Indicates that the No. 1 engine oil filter is clogged, and bypass has begun. Illuminates at 60 - 80 PSID increasing. An oil filter bypass sensor, mounted on the oil filter assembly, monitors the pressure differential across the filter. When a pressure differential of 60 to 80 PSID is sensed, the switch closes and a path to ground is completed, causing the caution light to illuminate.
OIL BYP ENG 2	AMBER	Operates on the same parameters as the OIL BYP ENG 1 caution light.
FUEL BYP ENG 1	AMBER	Indicates that the No. 1 fuel filter is clogged and bypass has begun. The fuel bypass sensor, installed on the engine fuel filter, monitors fuel flow pressure differential. When the pressure differential reaches 18 to 22 PSID, the sensor provides a path to ground, causing the caution light to illuminate.

PILOT CAUTION/WARNING PANEL

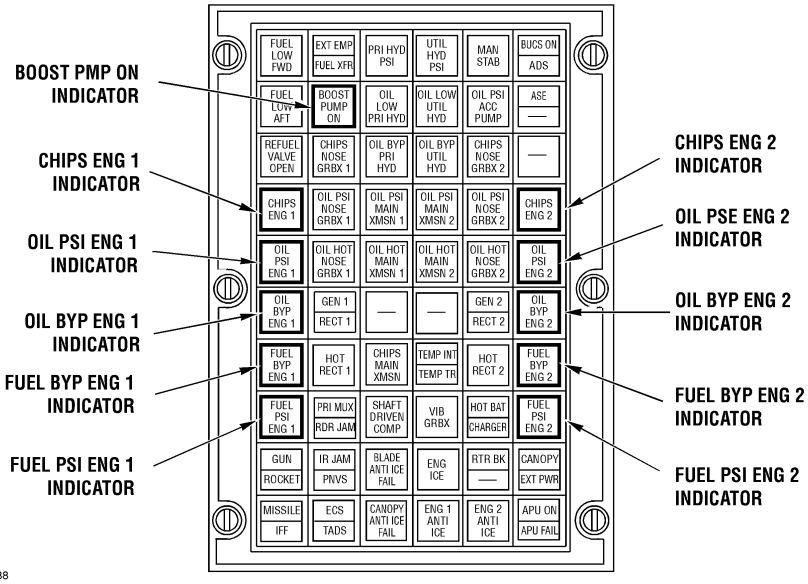

NOTES

FUEL BYP ENG 2	AMBER	Operates on the same parameters as the FUEL BYP ENG 1 caution light.
FUEL PSI ENG 1	RED	Indicates that the No. 1 engine fuel pressure is less than 9 PSI. The fuel pressure sensor, located on the left side of the engine AGB, monitors fuel pressure from the fuel boost pump to HMU. When fuel pressure decreases to 8.5 "0.5 PSI decreasing, the sensor provides a path to ground, causing the caution light to illuminate. The sensor opens the path to ground at 10.5 "0.5 PSI increasing, causing the caution light to extinguish.
FUEL PSI ENG 2	RED	Operates on the same parameters as the FUEL PSI ENG 1 caution light.
ENG 1 ANTI ICE	AMBER	Indicates that the No. 1 nose gearbox (NGB) heater and/or the engine inlet temperature sensor are not at operating temperature (under heating), or are above operating temperature (over heating) **Under heat condition** - When the ENG INLET toggle switch on the pilot's ANTI ICE panel is placed to the ON position, the ENG 1 ANTI ICE caution light illuminates and remains on until the NGB fairing electrical heater reaches 205E F (96E C) and the temperature sensor within the engine inlet reaches 155 "5E F (68.3 "2.8E C). **Over heat condition** - With the ENG INLET toggle switch in the ON position, the ENG 1 ANTI ICE caution light illuminates and remains on if the NGB fairing electrical heater reaches a temperature of 250E F (121E C). When the ENG INLET toggle switch on the pilot's ANTI ICE panel is turned OFF, the ENG 1 ANTI ICE caution light illuminates and remains on until the NGB fairing electrical heater cools below 205E F (96E C) and the temperature sensor within the engine inlet cools below 155 "5E F (68.3 "2.8E C). A sensor within the NGB fairing and/or the engine inlet temperature sensor complete a path to ground, when appropriate, causing the caution light to illuminate.
ENG 2 ANTI ICE	AMBER	Operates on the same parameters as the ENG 1 ANTI ICE caution light.

CPG CAUTION/WARNING PANEL

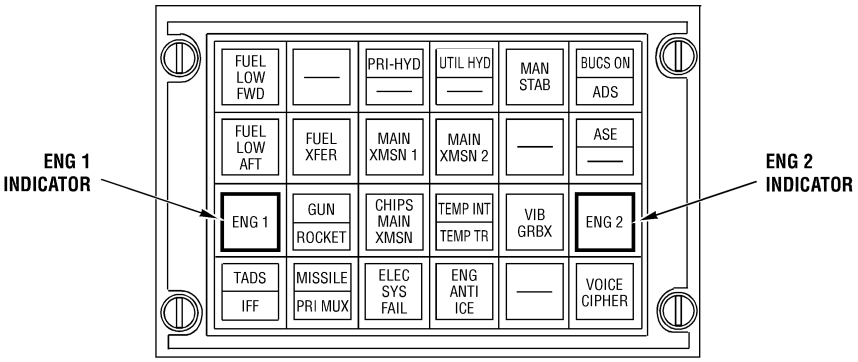

04-94-89

NOTES

CPG Caution/Warning/Advisory Panel		
Word Segment	**Color**	**Illumination Parameter or Fault**
ENG 1	AMBER	Indicates that one or a combination of the following conditions exist: **engine oil pressure low, engine oil filter in bypass, engine chips, engine fuel filter in bypass, engine fuel pressure low, nose gearbox chips, nose gearbox oil pressure low, nose gearbox oil temperature high.** The pilot's caution/warning/advisory panel provides the fault input signal (ground) to the CPG's caution light, causing it to illuminate.
ENG 2	AMBER	Indicates that one or a combination of the following conditions exist: **engine oil pressure low, engine oil filter in bypass, engine chips, engine fuel filter in bypass, engine fuel pressure low, nose gearbox chips, nose gearbox oil pressure low, nose gearbox oil temperature high.** The pilot's caution/warning/advisory panel provides the fault input signal (ground) to the CPG's caution light, causing it to illuminate.
ENG ANTI ICE	AMBER	Indicates that an engine anti-ice subsystem has failed. The pilot's caution/warning/advisory panel provides the fault input signal (ground) to the CPG's caution light, causing it to illuminate.

071-626-12

A. Powerplant technical manuals (TM 55-2840-248-23)

1. Table Of Contents

a. Chapter 1

(1) Sections I-VII are pertinent to AVUM.

(2) Section VIII is AVIM. The charts in Section VIII are set up for an engine that is in a mobile or fixed engine test stand and have different parameters than those established for an engine that is installed in an aircraft.

b. Chapters 2 through 10 are maintenance instructions for each engine system.

2. Appendixes

a. Appendix "A" - References

b. Appendix "B" - Maintenance Allocation Chart

c. Appendix "C" - (Not applicable) Each engine model version has a separate technical manual.

d. Appendix "D" - Expendable Supplies and Materials List

e. Appendix "E" - Schematic Diagrams (large pull-out type diagrams that are in the back of the book after the index)

f. Appendix "F" - Illustrated List of Manufactured Items

g. Appendix "G" - Torque Limits

h. Appendix "H" - General Maintenance Practices

3. Glossary - Lists and defines abbreviations and unusual terms associated with powerplant maintenance

4. Index - Alphabetical index used to help find information, listed by paragraph

5. List of Illustrations - Lists by figure number, in order of appearance, all illustrations, to include limitation charts that appear in this publication

6. List of Tables - Lists by table number, with reference to page number, all tables (inspection criteria, limitations, etc.), that appear in this publication

7. Cross-Reference List of Part Nomenclature

NOTES

8. List of Abbreviations

9. Chapter 1

a. Chapter overview - NOTE

b. Scope - Repair parts and special tools list (RPSTL)

c. Section II

(1) Equipment description and data

(2) Line replaceable units (LRU's)

(3) Fault indications and fault codes - Information is pertinent to 701C engine only

(4) History counter

(5) (T701C) digital electronic control (DEC) signal validation-fault codes

(6) (T701, T701C) equipment data

d. Section III - Repair Parts; Special Tools; Test, Measurement, and Diagnostic Equipment (TMDE); and Support Equipment

e. Section IV - Service Upon Receipt

f. Section V - Preventive Maintenance Checks and Services

(1) Table 1-5 - Ten-Hour/Fourteen-Day Inspection Checks

(2) Paragraph 1-56. Periodic Inspection Requirements (includes all of the 10 Hr/14 day inspection requirements)

g. Section VI - Troubleshooting (Engine Installed In Aircraft)

(1) Symptom Index (Aircraft)

(a) Troubleshooting procedures are used to locate and correct faults, with the engine(s) installed in the aircraft. However, some repair procedures require engine removal.

(b) The troubleshooting information and procedures outlined in TM 55-2840-248-23, were designed to reduce:

1) Unnecessary replacement of engine parts.

NOTES

2) Aircraft downtime and delays due to maintenance of the engine(s).

(c) The aircraft inspection and maintenance form, DA 2408-13/2408-13E, can best describe the foundation of the problem.

1) Gather as much information as possible from the form.

2) The information on the form may describe the fault completely.

(d) The symptoms (faults) are listed by:

1) Heading that references a particular AH-64A system.

2) Sub-listing that describes a symptom within a particular system.

3) A troubleshooting reference is provided for the symptom. The reference is described as a troubleshooting procedure number, ranging from 1 to 66.

(e) The troubleshooting procedure lists the parts that could cause faults.

1) If there is no danger of causing engine damage, the probable fault should be confirmed with a ground run.

2) Crewstation indications can often reveal which part is causing the fault.

3) Cross check crewstation indications against other crewstation readings to lessen the prospect of a false indication.

(f) The troubleshooting procedure lists the action to be taken to correct the fault.

1) Data particular to:

a) The -701 engine is identified as "T701" in parenthesis.

NOTES

b) The -701C engine is identified by "T701C" in parenthesis.

c) Data common to both engine models is not differentiated.

2) Nomenclature particular to the AH-64A crewstation instrument panels and controls are cross-referenced in Table 1-6B.

(g) When engine parts have been replaced or removed to gain access to other parts/areas, the affected engine must have a checkout in accordance with TM 55-2840-248-23, paragraph 1-113.

(h) When a new or reinstalled engine is outfitted on an aircraft, the engines must have a checkout in accordance with TM 55-2840-248-23, paragraph 1-112.

TROUBLESHOOTING LOGIC DIAGRAM

TM 55-2840-248
T.O. 2J-T700-6

TROUBLESHOOTING PROCEDURE 5.1. (T701, T701C) ENGINE FLAMES OUT DURING Np OVERSPEED CHECK (Combustion stops indicate by a drop in TGT).

NOTE

- **Flameout can be caused by a compressor stall**
- **Engine ignition must be on for this check**

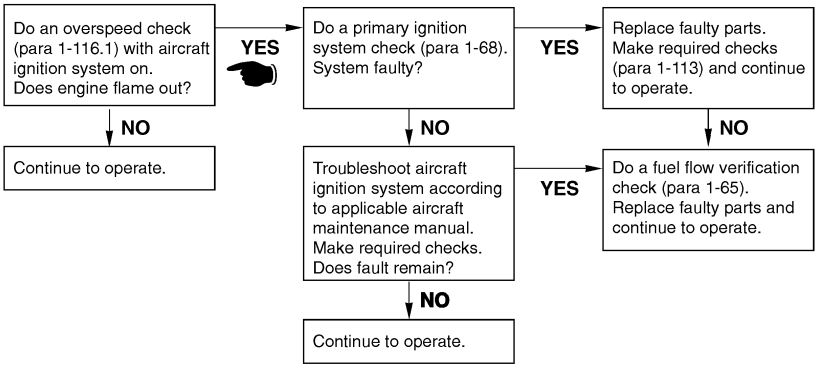

04-94-90

NOTES

(i) Troubleshooting logic diagram - Troubleshooting procedures are detailed in a logic diagram format.

1) Two procedural assumptions have been made.

a) The correct operating procedures have been followed.

b) The fault has been caused by a single failure.

2) A question about the symptom is asked, the answer to which is either "yes" or "no".

3) The answer to the symptom question (yes/no) leads to another question and/or a final solution.

(2) Symptom - engine flames out during ground operation

(a) Identify the symptom in the symptom index, then go to the beginning of the flow chart on page 1-77.

(b) The first step is to "prime engine fuel system (paragraph 1-118). Go to paragraph 1-118 on page 1-254.3.

(c) Go back to page 1-77. Follow the flow chart answering the questions ask in each block as follows: NO, NO.

(d) Go to page 10-20 for the inspection criteria of the P3 tube, then go back to page #1-78.

(e) The next answer sequence is: NO, NO.

(f) The next answer is NO. Continue to operate.

(3) Troubleshooting checks (aircraft)

(a) Electrical chip detector debris analysis

(b) Circuit Checks at S39 Connector on ECU or DEC

(c) ECU, or DEC Circuit Continuity Switch Box for S39 Connector.

(d) (T701) Engine Maintenance Requirements for Over-temperature Operation from Start-To-Ground Idle and from Ground-Idle-To-Shutdown.

TROUBLESHOOTING LOGIC DIAGRAM

TM 55-2840-248
T.O. 2J-T700-6

TROUBLESHOOTING PROCEDURE 5.1. (T701, T701C) ENGINE FLAMES OUT DURING Np OVERSPEED CHECK (Combustion stops indicate by a drop in TGT).

NOTE

- **Flameout can be caused by a compressor stall**
- **Engine ignition must be on for this check**

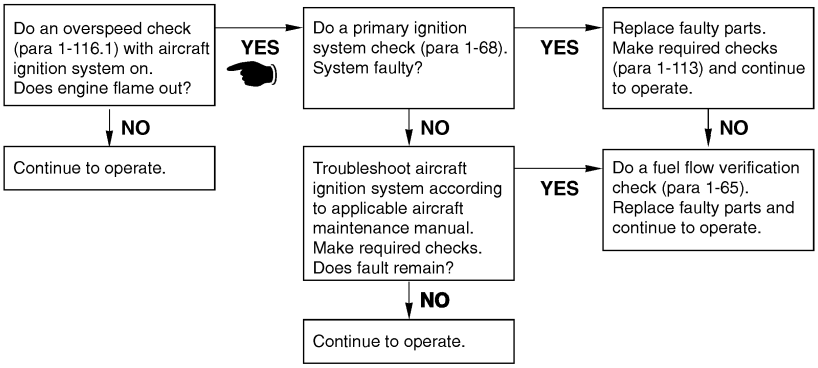

04-94-90

NOTES

(e) (T701) Engine Maintenance Requirements for Over-temperature Operation Above Ground Idle

(4) Section VII. General Maintenance Procedures

(a) Maintenance and Cleaning Requirements for Engines Exposed to Fire-Extinguishing Agents (External Exposure Only).

1) Item #7, Halon 1301, type used on AH-64 on-board fire extinguishing system

(b) Maintenance and Cleaning Requirements for Engines Exposed to Fire-Extinguishing Agents (External and Internal Exposure).

1) Item # 7, Halon 1301

(c) Oil Tank Cap; Correct Installation

(d) (T701, T701C) Engine Operating Limits (In Aircraft)

(e) Oil Consumption

(f) Maintenance Requirements following N_P Overspeed (Above 22,000 RPM)

(g) Maintenance Requirements Following Engine Over-torque (Above 116%)

(h) Time-to-Idle Limits

(i) Engine Checks Required following Replacement of Parts

(j) Table 1-11 shows what checks must be accomplished after replacement of certain parts.

(k) (T701, T701C) Maximum Power Check for AH-64A

(5) Health Indicator Test (HIT) Check Procedure for UH-60A, UH-60L and AH-64A

(6) HIT Baseline Check and Engine Performance Data Checks for UH-60A, UH-60L and AH-64A

071-626-12

FAT _____
PA _____

INDICATED TGT

1. _____
2. _____
3. _____

Total _____) 3

= _____ Average Indicated TGT

= _____ Table TGT

= _____ TGT Margin

TGT Acceptance Limits -TGT Margin + 20 Deg C = _____

TGT Margin - 20 Deg C = _____

(7) Operational Engine HIT and Anti-Ice Check

(8) Cleaning for performance recovery

(9) Hot section cleaning of engines operating in a dirty environment

(10) Definitions of inspection terms

(11) Borescope port locations

h. Section VII engine test in mobile or fixed facilities

(1) Checks required following replacement of parts at AVIM

B. Chapters 2 through 10 - These chapters are the step-by-step maintenance instructions.

C. Appendixes

1. Appendix A: References

2. Appendix B: Maintenance allocation chart

3. Appendix C: Not applicable

4. Appendix D: Expendable supplies and materials list

5. Appendix E: Schematic diagrams

6. Appendix F: Illustrated list of manufactured items

7. Appendix G: Torque limits

8. Appendix H: General maintenance practices

a. Captive bolts

b. Mating and sealing electrical connectors with hex coupling nuts

c. Torque and Overspeed Sensor and N_P Sensor Electrical Connectors; Sealing

d. Wrench-arc method for tightening

D. Glossary

E. Alphabetical index

BORESCOPE INSPECTION

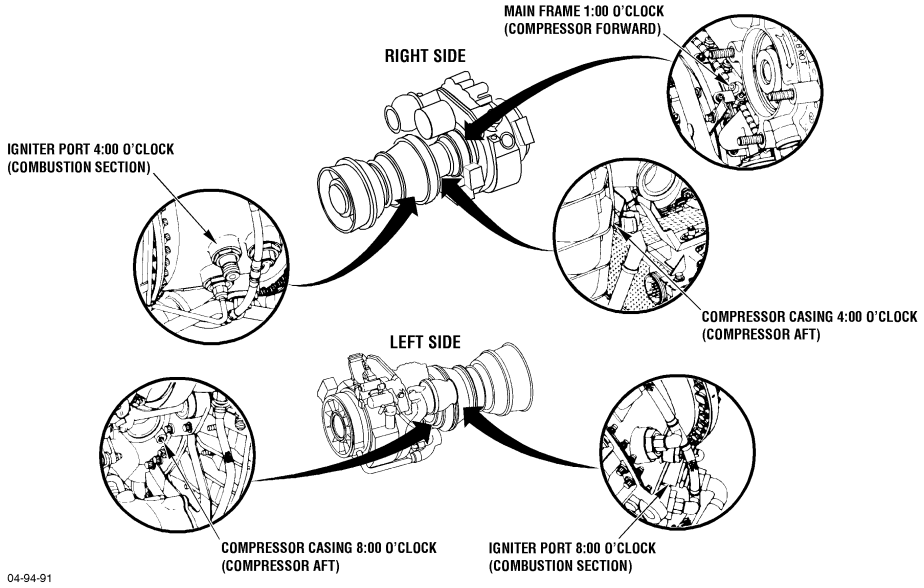

NOTES

A. Borescope inspection

1. Saves time - engine parts may be inspected for damage without engine disassembly, or removal of the engine from the aircraft.

2. Five inspection port locations are provided.

   a. Compressor forward

      (1) Port No. 1 - Main frame, 1:00 o'clock position.

      (2) Allows inspection of the IGVs and stage one blade.

   b. Compressor aft

      (1) Port No. 2 - Compressor casing, 4:00 o'clock position.

      (2) Port No. 4 - Compressor casing, 8:00 o'clock position.

      (3) Allows inspection of the 5th stage blade and leading edge of impeller vanes.

   c. Hot section

      (1) Port No. 3 - Igniter port, 8:00 o'clock position.

      (2) Port No. 5 - Igniter port, 4:00 o'clock position.

      (3) Allows inspection of the combustion liner and stage one nozzle.

3. On installed engines, some borescope ports cannot be reached due to the mounting of quick change assembly (QCA) equipment. Do not remove QCA equipment to use such ports.

   a. For engines installed on the left side of the aircraft, ports No. 3 and No. 7 cannot be used.

      (1) Use port No. 5 instead of No. 3.

      (2) Use port No. 4 instead of No. 7.

   b. For engines installed on the right side of the aircraft, ports No. 4 and No. 5 cannot be used.

      (1) Use port No. 7 instead of No. 4.

      (2) Use port No. 3 instead of No. 5.

BORESCOPE INSPECTION COMPRESSOR FORWARD

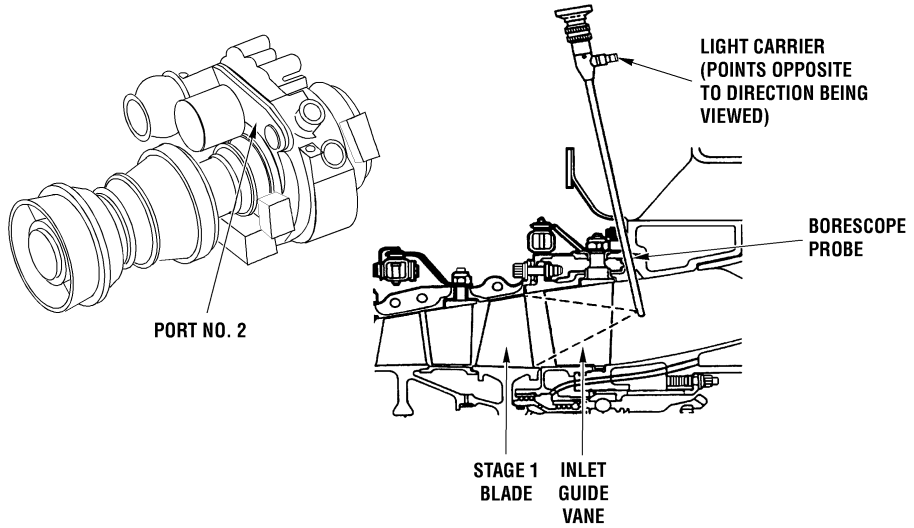

04-94-92

NOTES

B. Inspection of the compressor forward area

1. The borescope inspection port for the compressor forward area is located on the main frame at the 1 o'clock position. This port is commonly known as port No. 2.

2. Borescope inspection is required for the following parts in the compressor forward area:

   a. Compressor case flowpath coating. Inspect flowpath coating in accordance with TM 55-2840-248-23.

   b. The stage 1 compressor vanes. Inspect compressor vanes in accordance with TM 55-2840-248-23.

   c. Visible portions of the inlet guide vanes. Inspect inlet guide vanes in accordance with TM 55-2840-248-23.

BORESCOPE INSPECTION COMPRESSOR AFT

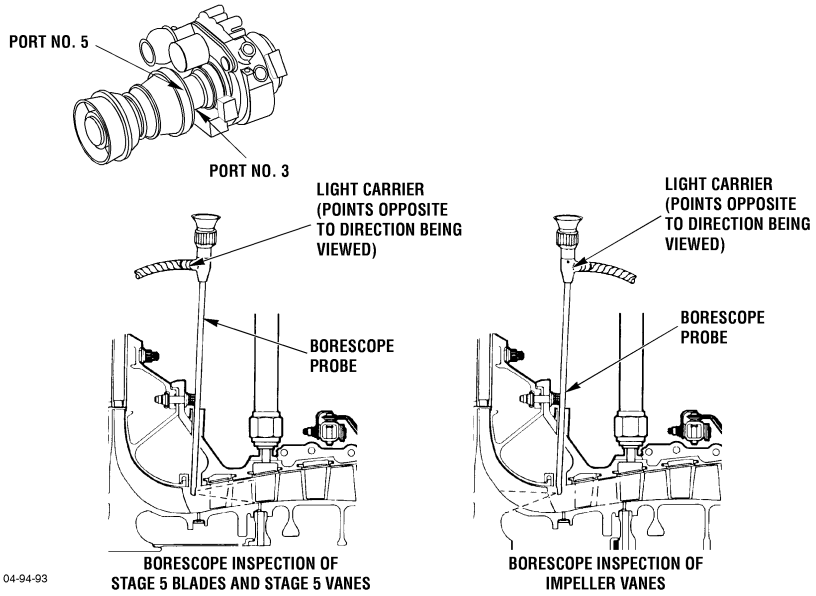

NOTES

C. Inspection of the compressor aft area

1. The borescope inspection ports for the compressor aft area are located on the compressor casing at the 4 and 8 o'clock positions. These ports are commonly known as No. 3 and 5, respectively.

2. Borescope inspection is required for the following parts in the compressor aft area:

   a. Compressor case flowpath coating. Inspect flowpath coating in accordance with TM 55-2840-248-23.

   b. Compressor rotor. Inspect compressor rotor in accordance with TM 55-2840-248-23.

   c. 5th stage compressor blades in accordance with TM 55-2840-248-23.

BORESCOPE INSPECTION COMBUSTION SECTION

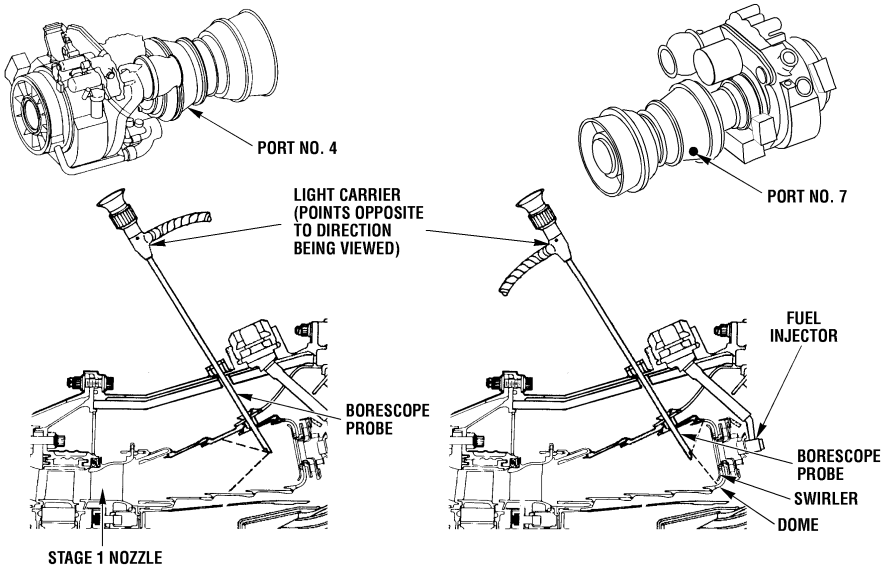

04-94-94

NOTES

D. Inspection of the combustion section

1. The borescope inspection ports for the combustion section are located on the combustion section at the 4 and 8 o'clock positions. These ports are commonly known as No. 4 and No. 7, respectively.

2. Borescope inspection is required for the following parts in the combustion section.

a. Combustion liner shell. Inspect combustion section in accordance with TM 55-2840-248-23. Inspect all visible areas of the liner shell.

b. Inner shell. Adjust depth of probe until the inner shell can be viewed.

c. Outer shell. Inspect outer shell in accordance with TM 55-2840-248-23.

d. Stage 1 turbine nozzle. Inspect Stage 1 turbine nozzle in accordance with TM 55-2840-248-23.

E. Borescope kit.

WARNING

Insert the scope slowly, do not force the scope into any component.

WARNING

Do not insert the scope into a component that has electrical power running through it.

WARNING

Turn the angulation knobs as slowly and gently as possible. If abnormal resistance is felt, stop the operation and extract the scope.

1. Internal inspection of the T701 or T701C engine can be accomplished using the following borescope kits.

BORESCOPE KIT 21C7190P02

04-94-95

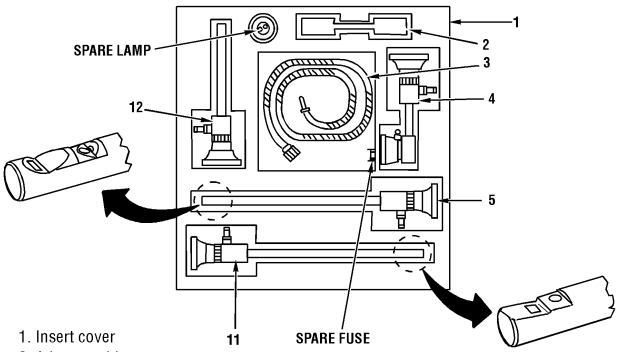

1. Insert cover
2. Adapter cable
3. Light carrier
4. Right-angle extension
5. Retrospective rigid borescope
6. Power cord
7. ON/OFF switch
8. Light intensity control
9. Light supply port
10. Light supply
11. Right-angle rigid borescope (long)
12. Right-angle rigid borescope (short)

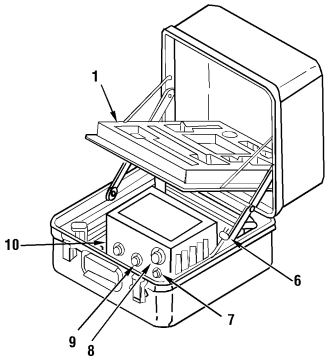

NOTES

a. Borescope kit 21C7190P02

071-

BORESCOPE KIT 21C7700P03

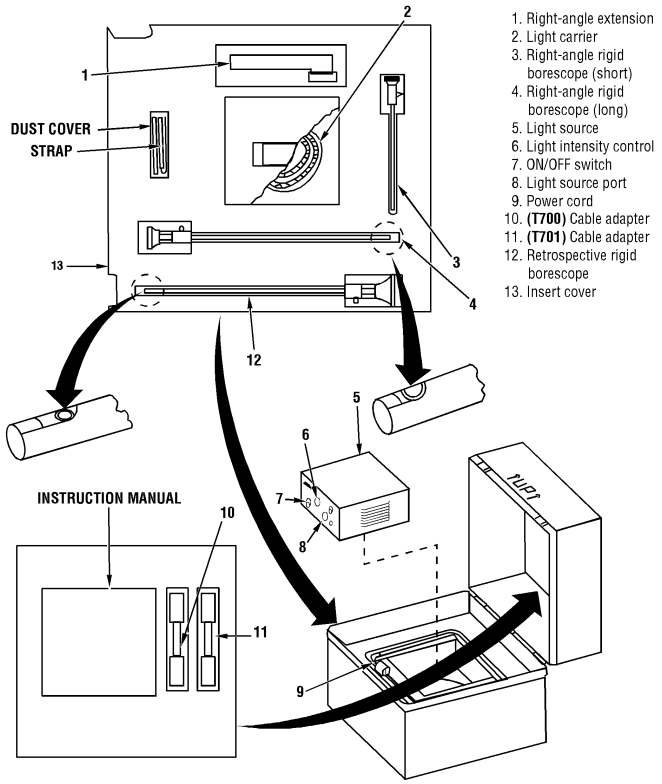

04-94-96

NOTES

b. Borescope kit 21C7700P03

071-

BORESCOPE KIT 21C7744P03

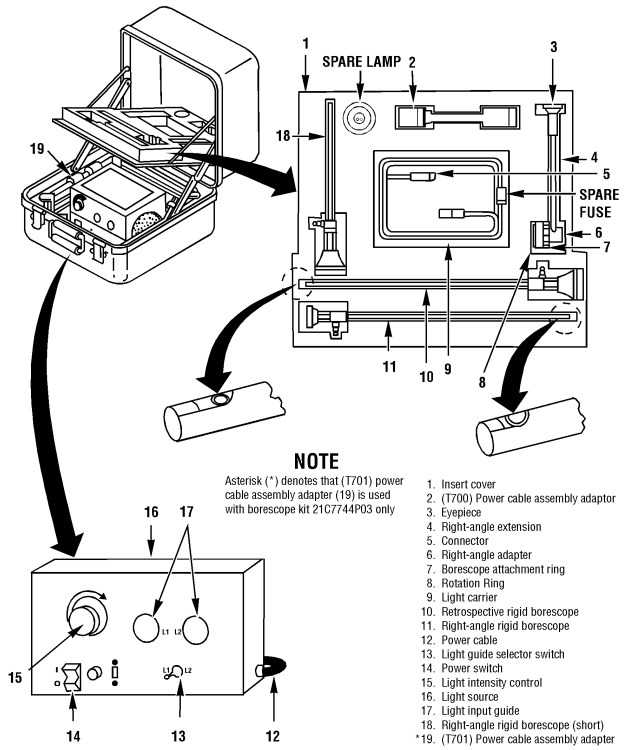

NOTE

Asterisk (*) denotes that (T701) power cable assembly adapter (19) is used with borescope kit 21C7744P03 only

1. Insert cover
2. (T700) Power cable assembly adaptor
3. Eyepiece
4. Right-angle extension
5. Connector
6. Right-angle adapter
7. Borescope attachment ring
8. Rotation Ring
9. Light carrier
10. Retrospective rigid borescope
11. Right-angle rigid borescope
12. Power cable
13. Light guide selector switch
14. Power switch
15. Light intensity control
16. Light source
17. Light input guide
18. Right-angle rigid borescope (short)

*19. (T701) Power cable assembly adapter

04-94-97

NOTES

c. Borescope kit 21C7744P03

BORESCOPE KIT 21C7779P03

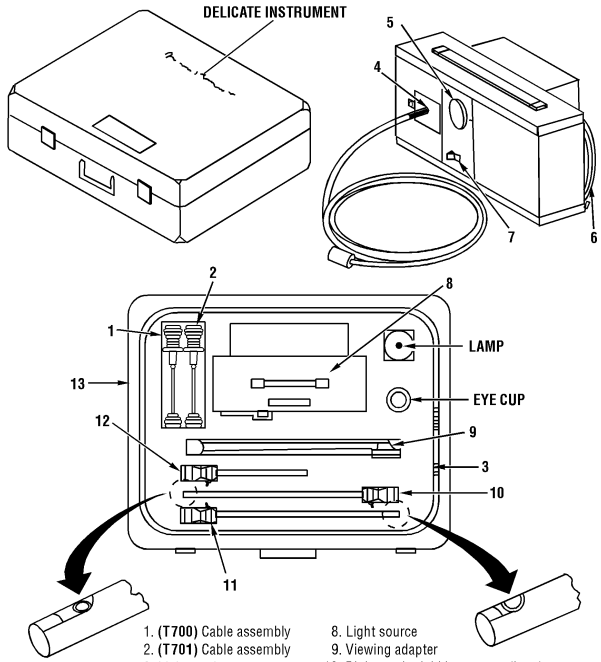

1. **(T700)** Cable assembly
2. **(T701)** Cable assembly
3. Light carrier
4. Light source port
5. Light intensity control
6. Power cord
7. ON/OFF switch
8. Light source
9. Viewing adapter
10. Right-angle rigid borescope (long)
11. Retrospective rigid borescope
12. Right-angle rigid borescope (short)
13. Transit case

04-94-98

NOTES

d. Borescope kit 21C7779P03